Content

Technical Information

II Material Data
III Conductors
IV Tubes
V Drillingplans

1. Single Connectors ≤ 245 kV

1.1 Straight-Connectors
1.2 T-Connectors
1.3 90°-Connectors
1.4 Angle-Connectors
1.5 Support-Connectors
1.6 Earthing Stirrup

2. Bundle Connectors ≤ 245 kV

2.1 Straight-Connectors
2.2 T-Connectors
2.3 90°-Connectors
2.4 Angle-Connectors
2.5 Support
2.6 Earthing Stirrup

3. Expansions Connectors & Support ≤ 245 kV

3.1 Straight-Expansions Connectors
3.2 T-Expansions Connectors
3.3 90°-Expansions Connectors
3.4 Angle-Expansions Connectors
3.5 Support

Content

4. Accessories ≤ 245 kV

4.1 Disconnector Countercontact
4.2 Spacer
4.3 Tube-Endcap
4.4 Accessories

5. Single Connectors ≤ 420 kV

5.1 Straight-Connectors
5.2 T-Connectors
5.3 90°-Connectors
5.4 Angle-Connectors
5.5 Support
5.6 Earthing Stirrup

6. Bundle Connectors ≤ 420 kV

6.1 Straight-Connectors
6.2 T-Connectors
6.3 90°-Connectors
6.4 Angle-Connectors
6.5 Support
6.6 Earthing Stirrup

7. Expansions Connectors & Support ≤ 420 kV

7.1 Straight-Expansions Connectors
7.2 T-Expansions Connectors
7.3 90°-Expansions Connectors
7.4 Angle-Expansions Connectors
7.5 Support

Content

8. Accessories ≤ 420 kV

8.1 Disconnector Countercontact
8.2 Spacer
8.3 Tube-Endcap
8.4 Accessories

9. Referenzen > 420 kV

10. Referenzen DC

Material Data

For used Aluminium

		Sand casting EN AB-AlSi7Mg0,3	Permanent mould EN AB-AlSi9Mg DV	Die forged AlMgSi1 F30/F31	AlMg3
Aluminium composition	Si	6,50-7,50 %	9,00-10,00 %	0,70-1,30 %	0.40%
	Fe	max. 0,15 %	max. 0,15%	0.50%	0.40%
	Cu	max. 0,03 %	max.0,03 %	0.10%	0.10%
	Mn	max. 0,05 %	max. 0,05 %	0,40-1,00 %	0.50%
	Mg	0,35-0,42 %	0,35-0,42 %	0,60-1,20 %	2,60-3,60 %
	Zn	max. 0,07 %	max. 0,07 %	0.20%	0.20%
	Ti	0,10-0,15 %	max. 0,10 %	0.10%	0.10%
	Sr	-	0,025-0,054	-	-
	Ca	max. 30 ppm	max. 30 ppm	-	-
Tensile strength	R_m	-	190	300	190
	R_m (T6)	230	250	-	-
Elongation	A_5	-	4-7	5-6	12
	A_5 (T6)	2-5	4-7	-	-
Brinell hardness	HB 5	-	75	90-115	50
	HB 5 (T6)	85	85	-	-

Material Data

For used Bolts

Quality	Tightening torquels	
A2F80	M10	45 Nm
	M12	75 Nm
	M16	150 Nm

All Aluminium Conductors

Standard: ASTM-B 231

Code word	MCM	Cross Section Effective	Diameter	Calcul. breaking load	Curr. carrying	Stranding	
						Construc-tion core	Diam. of core wire
		mm^2	mm	kN	A	Pc.	mm
ANEMONE	875	443.00	27.36	73.30	641	37	3.90
ARBUTUS	795	403.00	26.10	61.24	605	37	3.72
ASTER	AWG 2/0	67.42	10.50	10.45	207	7	3.50
BITTERROOT	2750	1393.00	48.60	207.52	1242	91	4.41
BLUEBELL	1034	524.00	29.70	78.00	706	37	4.24
BLUEBONNET	3500	1773.00	54.80	264.12	1425	127	4.22
CAMELLIA	1000	507.00	29.30	78.61	693	61	3.25
CANNA	398	201.00	18.40	30.63	401	19	3.67
CARNATION	1431	725.00	35.00	108.00	854	61	3.89
CATTAIL	750	380.00	25.30	60.13	586	61	2.82
COCKSCOMB	900	456.00	27.70	67.92	651	37	3.96
COLUMBINE	1352	685.00	34.00	104.12	825	61	3.78
COREOPSIS	1590	806.00	37.00	120.00	907	61	4.10
COSMOS	477	242.00	20.10	35.99	447	19	4.02
COWSLIP	2000	1013.00	41.40	154.07	1035	91	3.76
CROCUS	875	443.00	27.36	73.30	641	61	3.04
DAFFODIL	350	177.40	17.20	27.51	373	19	3.45
DAHLIA	557	282.00	21.70	41.99	489	19	4.35
DAISY	267	135.20	14.90	20.13	313	7	4.96
FLAG	700	355.00	24.50	57.25	563	61	2.72
GLADIOLUS	1511	766.00	36.00	114.00	881	61	4.00
GOLDENROD	954	483.00	28.60	75.00	675	61	3.18
GOLDENTUFT	450	228.00	19.60	33.95	432	19	3.91
HAWKWEED	1000	507.00	29.20	75.50	693	37	4.18
HAWTHORN	1193	604.00	32.00	93.74	767	61	3.55
HEUCHERA	650	329.00	23.60	51.10	538	37	3.37
HYACINTH	500	253.00	20.70	40.10	461	37	2.95
IRIS	AWG 2	33.61	7.40	5.63	136	7	2.47
JESSAMINE	1750	887.00	38.70	132.06	959	61	4.30
LARKSPUR	1034	524.00	29.80	81.24	707	61	3.31
LAUREL	267	135.20	15.10	21.39	317	19	3.01
LILAC	795	403.00	26.10	63.75	607	61	2.90
LUPINE	2500	1267.00	46.31	186.10	1700	91	4.21
MAGNOLIA	954	483.00	28.60	71.99	674	37	4.08
MARIGOLD	1113	564.00	30.90	87.50	738	61	3.43
MEADOWSWEET	600	304.00	22.60	47.16	513	37	3.23

LORÜNSER AUSTRIA

All Aluminium Conductors

Standard: ASTM-B 231

Code word	MCM	Cross Section Effective	Diameter	Calcul. breaking load	Curr. carrying	Stranding	
						Construc-tion core	Diam. of core wire
		mm^2	mm	kN	A	Pc.	mm
MISTLETOE	557	282.00	21.80	43.75	493	37	3.11
NARCISSUS	1272	645.00	33.00	98.00	797	61	3.67
NASTURTIUM	716	363.00	24.80	58.50	570	61	2.75
OXLIP	AWG 4/0	107.20	13.30	15.97	273	7	4.42
ORCHID	636	322.00	23.31	55.55	531	37	3.33
PANSY	AWG 1	42.39	8.30	6.84	157	7	2.78
PEACHBELL	AWG 6	13.29	4.70	2.35	72	7	1.55
PEONY	300	152.00	16.00	23.58	340	19	3.19
PETUNIA	750	380.00	25.30	57.77	585	37	3.62
PHLOX	AWG 3/0	85.03	11.80	12.66	237	7	3.93
POPPY	AWG 1/0	53.48	9.40	8.30	180	7	3.12
ROSE	AWG 4	21.16	5.90	3.68	104	7	1.96
SAGEBRUSH	2250	1140.00	43.90	169.80	1108	91	3.99
SNAPDRAGON	900	456.00	27.80	70.75	653	61	3.09
SNEEZEWORT	250	126.70	14.40	18.87	300	7	4.80
SYRINGA	477	242.00	20.20	38.25	449	37	2.88
TRILLIUM	3000	1520.00	50.70	226.40	1308	127	3.90
TULIP	336	170.50	16.90	26.45	364	19	3.38
VALERIAN	250	126.70	14.60	20.05	305	19	2.91
VERBENA	700	355.00	24.50	55.03	562	37	3.49
VIOLET	716	363.00	24.70	56.25	570	37	3.53
ZINNIA	500	253.00	20.60	37.73	459	19	4.12

Aluminium Conductors Steel Reinforced

Standard: ASTM-B 231

Code word	Cross Section				Dia-meter	Calcul. breaking load	Curr. carry-ing	Stranding and wire diameter of core wire			
	Aluminium		Steel	Toal				Aluminium		Steel	
	MCM	mm²	mm²	mm²	mm	kN	A	Pc.	mm	Pc.	mm
BITTERN	1272	644.40	44.66	644/45	34.17	152.00	802	45	4.27	7	2.85
CANARY	900	456.28	59.15	456/59	29.52	142.20	660	54	3.28	7	3.28
CARDINAL	954	484.53	62.81	485/63	30.42	150.00	681	54	3.38	7	3.38
CHUKAR	1780	903.18	73.54	903/74	40.70	228.50	975	84	3.70	19	2.22
COCHIN	211	107.04	62.44	107/62	16.85	92.20	288	12	3.37	7	3.37
CONDOR	795	402.33	52.15	402/52	27.72	125.50	614	54	3.08	7	3.08
CRANE	875	442.47	57.36	442/57	29.07	138.30	649	54	3.23	7	3.23
CROW	716	361.62	46.88	362/47	26.28	115.70	577	54	2.92	7	2.92
CURLEW	1034	525.50	68.12	526/68	31.68	162.80	715	54	3.52	7	3.52
DOTTEREL	177	89.41	52.15	89/52	15.40	77.20	260	12	3.08	7	3.08
DRAKE	795	402.56	65.44	403/65	28.11	140.20	614	26	4.44	7	3.45
DUCK	605	306.58	39.81	307/40	24.21	100.11	738	54	2.69	7	2.69
EAGLE	557	282.07	65.82	282/66	24.22	123.60	500	30	3.46	7	3.46
EGRET	636	322.56	73.54	323/74	25.90	140.20	542	30	3.70	19	2.22
FALCON	1590	806.23	102.43	806/102	39.26	243.20	917	54	4.36	19	2.62
FINCH	1113	565.03	71.57	565/72	32.85	173.60	746	54	3.65	19	2.19
FLAMINGO	667	337.27	43.72	337/44	25.38	105.90	552	24	4.23	7	2.82
GANNET	667	338.26	54.90	338/55	25.76	117.70	618	26	4.07	7	3.16
GRACKLE	1193	602.79	76.89	603/77	33.97	186.30	773	54	3.77	19	2.27
GROSBEAK	636	321.84	52.49	322/52	25.15	111.80	538	26	3.97	7	3.09
GUINEA	159	80.36	46.88	80/47	14.60	71.10	244	12	2.92	7	2.92
GULL	667	337.74	43.81	338/44	25.38	109.23	784	54	2.82	7	2.82
HAWK	477	241.65	39.49	242/39	21.80	87.00	455	26	3.44	7	2.68
HEN	477	241.27	56.30	241/56	22.40	105.90	457	30	3.20	7	3.20
IBIS	398	201.34	32.73	201/33	19.88	72.50	403	26	3.14	7	2.44
KINGBIRD	636	323.01	17.95	323/18	23.90	69.60	530	18	4.78	1	4.78
LARK	398	200.90	46.88	201/47	20.44	90.40	410	30	2.92	7	2.92
LEGHORN	135	68.20	39.78	68/40	13.45	60.50	197	12	2.69	7	2.69
LINNET	336	170.55	27.83	171/28	18.31	62.80	371	26	2.89	7	2.25
MALLARD	795	403.84	91.78	404/92	28.96	170.60	618	30	4.14	19	2.48
MARTIN	1352	685.39	86.67	685/87	36.17	205.90	835	54	4.02	19	2.41
ORIOLE	336	170.50	39.78	171/40	18.83	77.20	372	30	2.69	7	2.69
OSPREY	557	282.47	15.69	282/16	22.35	61.00	492	18	4.47	1	4.47
OSTRICH	300	152.19	24.71	152/25	17.28	56.50	346	26	2.73	7	2.12
OWL	267	135.39	17.62	135/18	16.09	43.15	322	6	5.36	7	1.79
PARAKEET	557	282.31	36.60	282/37	23.22	88.20	492	24	3.87	7	2.58

Aluminium Conductors Steel Reinforced

Standard: ASTM-B 231

Code word	Cross Section				Dia-meter	Calcul. breaking load	Curr. carry-ing	Stranding and wire diameter of core wire			
	Aluminium		Steel	Toal				Aluminium		Steel	
	MCM	mm^2	mm^2	mm^2	mm	kN	A	Pc.	mm	Pc.	mm
PARROT	1511	766.06	97.03	766/97	38.25	230.45	890	54	4.25	19	2.55
PARTRIDGE	267	134.87	22.00	135/22	16.28	50.20	323	26	2.57	7	2.00
PELICAN	477	242.31	13.46	242/13	20.70	52.30	449	18	4.14	1	4.14
PENGUIN	AWG 4/0	107.22	17.87	107/18	14.31	37.20	276	6	4.77	1	4.77
PHEASANT	1272	645.08	81.71	645/82	35.10	194.20	807	54	3.90	19	2.34
PHEOBE	300	152.00	8.45	152/8	16.40	35.51	350	18	3.28	1	3.28
PIGEON	AWG 3/0	85.14	14.19	85/14	12.75	29.50	241	6	4.25	1	4.25
PIPER	300	152.00	35.48	152/35	17.78	68.67	365	30	2.54	7	2.54
PLOVER	1431	726.92	91.78	727/92	37.24	217.70	862	54	4.14	19	2.48
QUAIL	AWG 2/0	67.33	11.22	67/11	11.34	23.50	210	6	3.78	1	3.78
RAVEN	AWG 1/0	53.52	8.92	54/9	10.11	19.50	183	6	3.37	1	3.37
ROBIN	AWG 1	42.41	7.07	42/7	9.00	15.90	160	6	3.00	1	3.00
ROOK	636	323.07	41.88	323/42	24.84	101.00	537	24	4.14	7	2.76
SPARROW	AWG 2	33.60	5.60	34/6	8.01	12.65	139	6	2.67	1	2.67
STARLING	716	361.93	59.15	362/59	26.68	126.50	578	26	4.21	7	3.28
SWALLOW	AWG 3	26.69	4.45	27/4	7.14	10.20	121	6	2.38	1	2.38
SWAN	AWG 4	21.18	3.53	21/4	6.36	8.30	105	6	2.12	1	2.12
THRUSH	AWG 5	16.83	2.81	17/3	5.67	6.60	91	6	1.89	1	1.89
TURKEY	AWG 6	13.30	2.21	13/2	5.04	5.30	78	6	1.68	1	1.68
WAXWING	267	134.98	7.50	135/8	15.45	30.60	319	18	3.09	1	3.09
WREN	AWG 8	8.39	1.42	8/1	3.99	3.33	50	6	1.33	1	1.34

All Aluminium Alloy Conductors

Standard: ASTM-B 399

Code word	Cross Section	Diameter	Calcul. breaking load	Curr. carrying	Stranding	
					Construction core	Diam. of core wire
	mm^2	mm	kN	A	Pc.	mm
AKRON	15.52	5.04	4.92	100	7	1.68
ACACIA	23.79	6.24	7.54	130	7	2.08
ALLIANCE	125.10	14.31	37.83	380	7	4.77
ALMOND	30.10	7.02	9.53	155	7	2.34
ALTON	24.71	6.36	7.83	135	7	2.12
AMES	39.19	8.01	12.42	180	7	2.67
AMHERST	99.30	12.75	30.03	325	7	4.25
ANAHEIM	78.55	11.34	23.75	280	7	3.78
ASH	180.70	17.40	52.90	490	19	3.48
AZUZA	62.44	10.11	19.78	240	7	3.37
BOX	18.82	5.55	5.55	115	7	1.85
BUTTE	158.60	16.30	48.67	445	19	3.26
CAIRO	236.40	19.90	69.25	570	19	3.98
CANTON	199.90	18.30	58.56	515	19	3.66
CEDAR	35.47	7.62	11.20	170	7	2.54
DARIEN	283.70	21.80	83.11	645	19	4.36
ELGIN	331.00	23.55	96.97	710	19	4.71
ELM	211.00	18.80	61.80	540	19	3.76
FIR	47.84	8.85	15.10	205	7	2.95
FLINT	374.50	25.13	107.40	775	37	3.59
GREELY	469.60	28.14	134.60	890	37	4.02
HAZEL	59.87	9.90	20.00	240	7	3.30
MULBERRY	150.90	15.90	46.30	435	19	3.18
OAK	118.90	13.95	36.00	370	7	4.65
PINE	71.65	10.83	22.70	270	7	3.61
POPLAR	239.40	20.09	71.90	580	37	2.87
RUBUS	586.90	31.50	164.00	1121	61	3.50
SORBUS	659.43	33.39	184.81	1260	61	3.71
SYCAMORE	303.00	22.61	84.90	680	37	3.23
TOTARA	498.10	28.98	140.00	951	37	4.14
UPAS	362.10	24.71	103.80	765	37	3.53
WILLOW	89.73	12.12	27.10	310	7	4.04
YEW	479.00	28.42	137.30	915	37	4.06

LORÜNSER AUSTRIA

All Aluminium Conductors

Standard: DIN 48201/5

Code word	Cross Section Effective	Diameter	Calcul. breaking load	Curr. carrying	Stranding	
					Construction core	Diam. of core wire
mm^2	mm^2	mm	kN	A	Pc.	mm
16	15.89	5.10	2.84	110	7	1.70
25	24.25	6.30	4.17	145	7	2.10
35	34.36	7.50	5.78	180	7	2.50
50	49.48	9.00	7.94	225	7	3.00
50	48.35	9.00	8.45	225	19	1.80
70	65.81	10.50	11.32	270	19	2.10
95	93.27	12.50	15.68	340	19	2.50
120	117.00	14.00	18.78	390	19	2.80
150	147.10	15.70	25.30	455	37	2.25
185	181.60	17.50	30.54	520	37	2.50
240	242.50	20.20	39.51	625	61	2.25
300	299.40	22.50	47.70	710	61	2.50
400	400.10	26.00	60.86	855	61	2.89
500	499.80	29.10	74.67	990	61	3.23
625	626.20	32.60	95.25	1140	91	2.96
800	802.10	36.80	118.39	1340	91	3.35
1000	999.70	41.10	145.76	1540	91	3.74

Aluminium Conductors Steel Reinforced

Standard: DIN 48204

Code word	Cross Section			Dia-meter	Calcul. breaking load	Curr. carry-ing	Stranding and wire diameter of core wire			
	Aluminium	Steel	Toal				Aluminium		Steel	
	mm^2	mm^2	mm^2	mm	kN	A	Pc.	mm	Pc.	mm
16/2,5	15.30	2.55	17.85	5.40	5.95	90	6	1.80	1	1.80
25/4	23.80	4.00	27.80	6.80	9.20	125	6	2.25	1	2.25
35/6	34.30	5.70	40.00	8.10	12.65	145	6	2.70	1	2.70
44/32	44.00	31.70	75.70	11.20	45.00	223	14	2.00	7	2.40
50/8	48.30	8.00	56.30	9.60	17.10	170	6	3.20	1	3.20
50/30	51.20	29.80	81.00	11.70	43.80	223	12	2.33	7	2.33
70/12	69.90	11.40	81.30	11.70	26.80	290	26	1.85	7	1.44
95/15	94.40	15.30	109.70	13.60	35.75	350	26	2.15	7	1.67
95/55	96.50	56.30	152.80	16.00	79.35	335	12	3.20	7	3.20
105/75	105.70	75.50	181.50	17.50	108.45	430	14	3.10	19	2.25
120/20	121.60	19.80	141.40	15.50	45.65	410	26	2.44	7	1.90
120/70	122.00	71.30	193.30	18.00	100.00	429	12	3.60	7	3.60
125/30	127.90	29.80	157.70	16.10	57.60	425	30	2.33	7	2.33
150/25	148.90	24.20	173.10	17.10	55.25	470	26	2.70	7	2.10
170/40	171.80	40.10	211.90	18.90	76.75	520	30	2.70	7	2.70
185/30	183.80	29.80	213.60	19.00	66.20	535	26	3.00	7	2.33
210/35	209.10	34.10	243.20	20.30	74.90	590	26	3.20	7	2.49
210/50	212.10	49.50	261.60	21.00	93.90	610	30	3.00	7	3.00
230/30	230.90	29.80	260.70	21.00	73.10	630	24	3.50	7	2.33
240/40	243.00	39.50	282.50	21.90	86.40	645	26	3.45	7	2.68
265/35	236.70	34.10	297.80	22.40	83.05	680	24	3.74	7	2.49
300/50	304.30	49.50	253.70	24.50	107.00	740	26	3.86	7	3.00
305/40	304.60	39.50	344.10	24.10	99.40	740	54	2.68	7	2.68
340/30	339.30	29.80	369.10	25.00	92.90	790	48	3.00	7	2.33
380/50	382.00	49.50	431.50	27.00	123.10	840	54	3.00	7	3.00
385/35	386.00	34.10	420.10	26.70	104.80	850	48	3.20	7	2.49
435/55	434.30	56.30	490.60	28.80	136.45	900	54	3.20	7	3.20
450/40	448.70	39.50	488.20	28.70	120.75	920	48	3.45	7	2.68
490/65	490.30	63.60	553.90	30.60	153.10	960	54	3.40	7	3.40
495/35	494.10	34.10	528.20	29.90	121.80	985	45	3.74	7	2.49
510/45	510.20	45.30	555.50	30.70	136.65	995	48	3.68	7	2.87
550/70	550.00	71.30	621.30	32.40	170.60	1020	54	3.60	7	3.60
560/50	561.70	49.50	611.20	32.20	148.95	1040	48	3.86	7	3.00
570/40	571.20	39.50	610.70	32.20	136.20	1050	45	4.02	7	2.68
650/45	653.50	45.30	698.80	34.00	155.50	1120	45	4.30	7	2.87
680/85	678.60	86.00	764.60	36.00	206.25	1150	54	4.00	19	2.40
1045/45	1045.60	45.30	1090.90	43.00	217.60	1580	72	4.30	7	2.87

All Aluminium Alloy Conductors

Standard: DIN 48201/6

Code word	Cross Section Effective	Diameter	Calcul. breaking load	Curr. carrying	Stranding	
					Construction core	Diam. of core wire
	mm^2	mm	kN	A	Pc.	mm
16	15.89	5.10	4.44	105	7	1.70
25	24.25	6.30	6.77	135	7	2.10
35	34.36	7.50	9.60	170	7	2.50
50	49.48	9.00	13.82	210	7	3.00
50	48.35	9.00	13.50	210	19	1.80
70	65.81	10.50	18.36	255	19	2.10
95	93.27	12.50	26.05	320	19	2.50
120	116.99	14.00	32.68	365	19	2.80
150	147.11	15.75	41.09	425	37	2.25
185	181.62	17.50	50.73	490	37	2.50
240	242.54	20.25	67.74	585	61	2.25
300	299.43	22.50	83.63	670	61	2.50
400	400.14	26.01	111.76	810	61	2.89
500	499.83	29.07	139.60	930	61	3.23
625	626.20	32.56	174.90	1075	91	2.96
800	802.09	36.85	224.02	1255	91	3.35
1000	999.71	41.14	279.22	1450	91	3.74

Aluminium Alloy Conductors Steel Reinforced

Standard: DIN 48206

Code word	Cross Section			Dia-meter	Calcul. breaking load	Curr. carry-ing	Stranding and wire diameter of core wire			
	Aluminium	Steel	Toal				Aluminium		Steel	
	mm^2	mm^2	mm^2	mm	kN	A	Pc.	mm	Pc.	mm
16/2,5	15.30	2.55	17.85	5.40	7.55	85	6	1.80	1	1.80
25/4	23.80	4.00	27.80	6.80	11.77	118	6	2.25	1	2.25
35/6	34.30	5.70	40.00	8.10	16.82	135	6	2.70	1	2.70
44/32	44.00	31.70	75.70	11.20	50.50	209	14	2.00	7	2.40
50/8	48.30	8.00	56.30	9.60	23.68	160	6	3.20	1	3.20
50/30	51.20	29.80	81.00	11.70	50.21	210	12	2.33	7	2.33
70/12	69.90	11.40	81.30	11.70	34.03	270	26	1.85	7	1.44
95/15	94.40	15.30	109.70	13.60	45.90	330	26	2.15	7	1.67
95/55	96.50	56.30	152.80	16.00	95.00	314	12	3.20	7	3.20
105/75	105.70	75.50	181.50	17.50	120.43	366	14	3.10	19	2.25
120/20	121.60	19.80	141.40	15.50	59.20	385	26	2.44	7	1.90
120/70	122.00	71.30	193.30	18.00	120.23	365	12	3.60	7	3.60
125/30	127.90	29.80	157.70	16.10	72.77	400	30	2.33	7	2.33
150/25	148.90	24.20	173.10	17.10	72.42	445	26	2.70	7	2.10
170/40	171.80	40.10	211.90	18.90	98.00	490	30	2.70	7	2.70
185/30	183.80	29.80	213.60	19.00	89.24	505	26	3.00	7	2.33
210/35	209.10	34.10	243.20	20.30	101.90	555	26	3.20	7	2.49
210/50	212.10	49.50	261.60	21.00	120.97	575	30	3.00	7	3.00
230/30	230.90	29.80	260.70	21.00	103.07	595	24	3.50	7	2.33
240/40	243.00	39.50	282.50	21.90	118.17	605	26	3.45	7	2.68
265/35	236.70	34.10	297.80	22.40	117.90	640	24	3.74	7	2.49
300/50	304.30	49.50	253.70	24.50	148.08	700	26	3.86	7	3.00
305/40	304.60	39.50	344.10	24.10	136.31	700	54	2.68	7	2.68
340/30	339.30	29.80	369.10	25.00	134.35	740	48	3.00	7	2.33
380/50	382.00	49.50	431.50	27.00	170.93	790	54	3.00	7	3.00
385/35	386.00	34.10	420.10	26.70	153.87	800	48	3.20	7	2.49
435/55	434.30	56.30	490.60	28.80	194.37	845	54	3.20	7	3.20
450/40	448.70	39.50	488.20	28.70	178.73	865	48	3.45	7	2.68
490/65	490.30	63.60	553.90	30.60	219.50	905	54	3.40	7	3.40
550/70	550.00	71.30	621.30	32.40	246.15	960	54	3.60	7	3.60
560/50	561.70	49.50	611.20	32.20	223.79	980	48	3.86	7	3.00
680/85	678.60	86.00	764.60	36.00	301.40	1080	54	4.00	19	2.40

Copper Cables

Standard: DIN 48201/1

Code word	Cross Section Effective	Diameter	Calcul. breaking load	Curr. carrying	Stranding	
					Construction core	Diam. of core wire
	mm^2	mm	kN	A	Pc.	mm
10	10.02	4.10	4.02	90	7	1.35
16	15.89	5.10	6.37	125	7	1.70
25	24.25	6.30	9.72	160	7	2.10
35	34.36	7.50	13.77	200	7	2.50
50	49.48	9.00	19.84	250	7	3.00
50	48.35	9.00	19.38	250	19	1.80
70	65.81	10.50	26.38	310	19	2.10
95	93.27	12.50	37.39	380	19	2.50
120	116.99	14.00	46.90	440	19	2.80
150	147.11	15.80	58.98	510	37	2.25
185	181.62	17.50	72.81	585	37	2.50
240	242.54	20.30	97.23	700	61	2.25
300	299.43	22.50	120.04	800	61	2.50
400	400.14	26.00	160.42	960	61	2.89
500	499.83	29.10	200.38	1110	61	3.23

Aluminium Tubes (metrical)

Standart: DIN 1795, DIN 9107

Outer Diameter	Wall Thickness	Inner Diameter	Cross Section	Current Δt= 65°C
mm	mm	mm	mm^2	A
30	4	22	327.00	800
40	5	30	550.00	1160
50	4	42	578.00	1020
	5	40	707.00	1250
	8	34	1060.00	1875
63	4	55	741.00	1530
	5	53	911.00	1700
	6	51	1074.00	1830
	8	47	1382.00	2070
70	5	60	1021.00	1960
75	5	65	1099.00	2000
80	4	72	955.00	1860
	5	70	1178.00	2070
	6	68	1395.00	2240
	8	64	1810.00	2550
	10	60	2199.00	2790
90	5	80	1335.00	2470
100	5	90	1492.00	2490
	6	88	1772.00	2710
	8	84	2312.00	3070
	10	80	2827.00	3360
120	5	110	1806.00	2880
	6	108	2149.00	3140
	8	104	2815.00	3580
	10	100	3456.00	3920
140	7	126	2923.00	4000
150	12	126	5199.00	6000
160	5	150	2435.00	3700
	6	148	2903.00	4050
	7	146	3365.00	4330
	8	144	3820.00	4630
	10	140	4712.00	5070
170	12	146	6182.00	6500
180	8	164	4320.00	5000

Aluminium Tubes (metrical)

Standart: DIN 1795, DIN 9107

Outer Diameter	Wall Thickness	Inner Diameter	Cross Section	Current Δt= 65°C
mm	mm	mm	mm^2	A
200	4	192	2463.00	4010
	5	190	3063.00	4520
	6	188	3657.00	4920
	8	184	4825.00	5660
	10	180	5969.00	6200
250	5	240	3848.00	5490
	6	238	4599.00	5990
	7	236	5341.00	6000
	8	234	6082.00	6870
	12	226	8972.00	8080
300	7	286	6443.00	7700
	8	284	7339.00	8130
	10	280	9111.00	8900
	12	276	10857.00	9510
	16	268	14275.00	10300
315	12	291	11423.00	9990
350	10	330	10681.00	10300
	16	318	16789.00	11800
400	16	368	19302.00	13400

Aluminium Tubes (IPS)

Standart IPS Tube

Dimension	Outer Dimension	Inner Diameter	Cross Section	Current Δt= 65°C
	mm	mm	mm^2	A
1/8“	10.3	7.2	43.2	
1/4“	13.7	9.5	76.8	
3/8“	17.2	12.5	107.0	310
1/2“	21.3	15.9	159.3	400
3/4“	26.6	20.9	216.0	495
1“	33.4	26.9	304.5	650
1 1/4“	42.2	34.7	447.6	810
1 1/2“	48.3	40.6	532.1	930
2“	60.3	52.3	703.0	1155
2 1/2“	73.0	63.5	1019.0	1550
3“	88.9	77.7	1458.0	1895
3 1/2“	101.6	88.9	1903.0	2170
4“	114.3	101.6	2154.0	2460
4 1/2“	127.0	114.5	2380.0	
5“	141.3	128.6	2689.0	3080
6“	168.2	155.6	3231.0	3735
8“	219.0	203.2	5263.0	
10“	273.0	254.5	7675.0	

LORÜNSER AUSTRIA

Aluminium Tubes (EHPS)

Extra Heavy Pipe Size

Dimension	Outer Dimension	Inner Diameter	Cross Section	Current Δt= 65°C
	mm	mm	mm^2	A
1/8“	10.3	5.2	61.9	
1/4“	13.7	7.5	103.8	
3/8“	17.2	10.7	141.2	350
1/2“	21.3	13.8	208.3	455
3/4“	26.6	18.7	287.8	565
1“	33.4	24.1	417.0	740
1 1/4“	42.2	32.3	576.0	930
1 1/2“	48.3	37.9	696.0	1070
2“	60.3	49.0	961.0	1350
2 1/2“	73.0	58.8	1477.0	1780
3“	88.9	73.5	1967.0	2195
3 1/2“	101.6	85.2	2393.0	2530
4“	114.3	97.0	2870.0	2880
4 1/2“	127.0	108.9	3342.0	
5“	141.3	122.3	3941.0	3635
6“	168.2	146.0	5476.0	4490
8“	219.0	193.0	8230.0	
10“	273.0	247.7	10384.0	

Copper Tubes

Dimension	Outer Dimension	Inner Diameter	Cross Section	Current Δt= 65°C
	mm	mm	mm^2	A
16/20	20.0	16.0	113	280
20/25	25.0	20.0	177	390
25/28	28.0	25.0	125	295
25/30	30.0	25.0	216	475
30/35	35.0	30.0	255	560
35/40	40.0	35.0	294	640
40/45	45.0	40.0	334	730
45/50	50.0	45.0	373	800
50/60	60.0	50.0	865	1340
55/60	60.0	55.0	451	1000
60/70	70.0	60.0	1025	1575
65/70	70.0	65.0	530	1155
76/80	80.0	76.0	490	1175

Copper Tubes

U. S. Standard

Dimension	Outer Dimension	Inner Diameter	Cross Section	Current Δt= 65°C
	mm	mm	mm^2	A
1/4“	13.71	9.53	76.8	
3/8“	17.15	12.54	107.0	
1/2“	21.33	15.88	159.3	550
3/4“	26.67	20.88	216.0	680
1“	33.40	26.97	304.5	860
1 1/4“	42.17	34.75	447.6	1130
1 1/2“	48.26	40.64	532.1	1285
2“	60.32	52.37	703.0	1585
2 1/2“	73.02	63.50	1019.0	2010
3“	88.90	77.77	1458.0	2560
3 1/2“	101.60	88.90	1903.0	3400
4“	114.30	101.60	2154.0	3700
4 1/2“	127.00	114.30	2380.0	4100
5“	141.30	128.60	2689.0	4750
6“	168.27	155.57	3231.0	

Drillingplans for Flat Terminals

Standard: DIN 46206/2; DIN 46206/3; NEMA

Dim. of Flat Terminal		Drillingplan					Standard
					Holes		
A	B	C	D	E	Pc.	ØF	
40	40				1	11.0	
					1	14.0	
					1	18.0	
				12.5	1	11.0	
				15	1	11.0	
				20	1	14.0	
60	60	26	17	26	2	14.0	DIN 46206/2-3
75	75	44.5	44.5		4	14.5	NEMA
		45	45		4	13.0	
					4	14.0	
80	80	40	40		4	14.0	
		44.5	44.5		4	14.5	NEMA
		45	45		4	13.0	
					4	14.0	
		50	50		4	13.0	
					4	14.0	DIN 46206/3-F1
100	100	40	40		4	14.0	
		44.5	44.5		4	14.5	NEMA
		45	45		4	13.0	
					4	14.0	
		50	50		4	13.0	
					4	14.0	DIN 46206/3-F1
125	125	40	40		9	14.0	
		44.5	44.5		4	14.5	
				25	6	14.5	NEMA
				25.75	6	14.5	NEMA
					9	14.5	NEMA
		50	50		4	14.0	
200	100	40	40		8	13.0	
					8	14.0	
		44.5	44.5		8	14.5	
		50	50		8	13.0	
					8	14.0	DIN 46206/3-F2

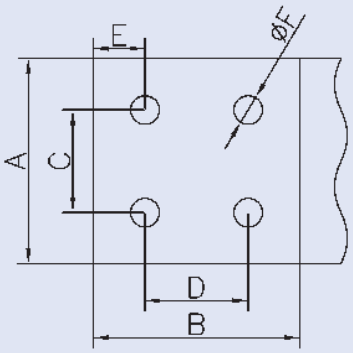

Drillingplans for Baseplates

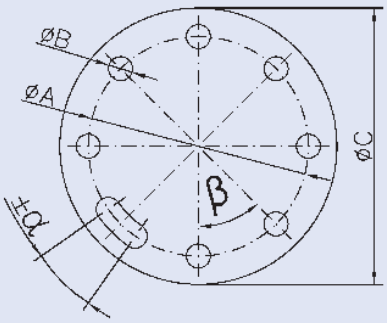

Drillingplan						Base Plate Diameter
BCD	Holes					
	Pcs.	ØB	Angle of Slot		β	
ØA			α Min.	α Max.		Min ØC
66	4	14				100
66	4	14			45°	100
66	8	14				100
66	4	14	±5°	±25°		100
66	4	14	±5°	±25°	45°	100
66	8	14	±5°	±15°		100
76	4	14				110
76	4	14			45°	110
76	8	14				110
76	4	14	±5°	±25°		110
76	4	14	±5°	±25°	45°	110
76	8	14	±5°	±15°		110
120	4	14				145
120	4	14			45°	145
120	8	14				145
120	4	18				145
120	4	18			45°	145
120	8	18				145
120	4	14				145
120	4	14			45°	145
120	8	14				145
120	4	18	±5°	±25°		145
120	4	18	±5°	±25°	45°	145
120	8	18	±5°	±15°		145
127	4	14	±5°	±25°		160
127	4	14	±5°	±25°	45°	160
127	8	14	±5°	±15°		160
127	4	18				160
127	4	18			45°	160
127	8	18				160
127	4	14	±5°	±25°		160
127	4	14	±5°	±25°	45°	160
127	8	14	±5°	±15°		160
127	4	18	±5°	±25°		160
127	4	18	±5°	±25°	45°	160
127	8	18	±5°	±15°		160

Drillingplans for Baseplates

Drillingplan						Base Plate Diameter
BCD	Holes					
	Pcs.	ØB	Angle of Slot		β	Min ØC
ØA			α Min.	α Max.		
178	4	18				220
178	4	18				220
178	8	18				220
178	4	18	±5°	±25°		220
178	4	18	±5°	±25°	±45°	220
178	8	18	±5°	±15°		220
225	4	18				260
225	4	18				260
225	8	18				260
225	4	18	±5°	±25°		260
225	4	18	±5°	±25°	±45°	260
225	8	18	±5°	±15°		260

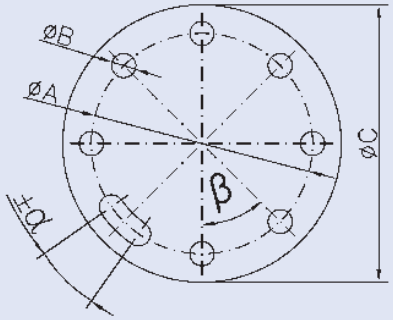

AL-Straight-Connector

Conductor-Conductor

Dimension of Conductor				Code	Technical Data of Connector					
ØA		ØB			Max. Current	Dim. of Connector			Bolt Dim.	
Min.	Max.	Min.	Max.			D	E	C	ØA	ØB
5,0	16,0	5,0	16,0	1AA010-002	450	62	62	140	M8	M8
5,0	16,0	16,1	24,0	1AA010-004	450	62	70	148	M8	M10
5,0	16,0	24,1	33,0	1AA010-022	450	62	78	156	M8	M10
16,1	24,0	16,1	24,0	1AA010-008	1000	70	70	168	M10	M10
16,1	24,0	24,1	33,0	1AA010-024	1000	70	78	164	M10	M10
16,1	24,0	33,1	42,0	1AA010-018	1000	70	78	177	M10	M10
16,1	24,0	42,1	52,0	1AA010-082	1000	70	90	183	M10	M10
16,1	24,0	52,1	63,0	1AA010-109	1000	70	90	186	M10	M10
24,1	33,0	24,1	33,0	1AA010-026	1250	78	78	182	M10	M10
24,1	33,0	33,1	42,0	1AA010-056	1250	78	78	178	M10	M10
24,1	33,0	42,1	52,0	1AA010-038	1250	78	90	192	M10	M10
24,1	33,0	52,1	63,0	1AA010-110	1250	78	90	193	M10	M10
33,1	42,0	33,1	42,0	1AA010-064	1400	78	78	172	M10	M10
33,1	42,0	42,1	52,0	1AA010-088	1400	78	90	180	M10	M10
33,1	42,0	52,1	63,0	1AA010-118	1400	78	90	191	M10	M10
42,1	52,0	42,1	52,0	1AA010-100	1700	90	90	194	M10	M10
42,1	52,0	52,1	63,0	1AA010-123	1700	90	90	208	M10	M10
52,1	63,0	52,1	63,0	1AA010-116	2200	90	90	202	M10	M10

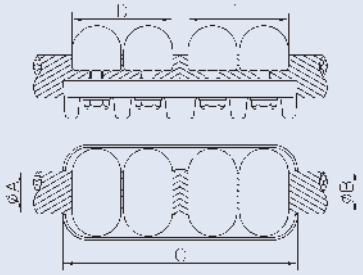

24,1	33,0	16,1	24,0	1AA010-014	1000	78	106	200	M10	M10
24,1	33,0	24,1	33,0	1AA010-030	1250	78	118	212	M10	M10
33,1	42,0	16,1	24,0	1AA010-020	1000	78	106	213	M10	M10
33,1	42,0	24,1	33,0	1AA010-034	1400	78	118	230	M10	M10
33,1	42,0	33,1	42,0	1AA010-070	1400	78	118	226	M10	M10
42,1	52,0	16,1	24,0	1AA010-037	1000	90	106	227	M10	M10
42,1	52,0	24,1	33,0	1AA010-040	1250	90	118	218	M10	M10
52,1	63,0	24,1	33,0	1AA010-106	1400	90	118	233	M10	M10
52,1	63,0	33,1	42,0	1AA010-114	1600	90	118	236	M10	M10

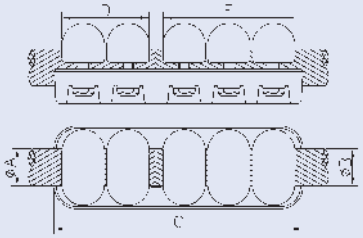

16,0	24,0	16,1	24,0	1AA010-012	1000	106	106	244	M10	M10
24,1	33,0	24,1	33,0	1AA010-044	1400	118	118	266	M10	M10
24,1	33,0	33,1	42,0	1AA010-036	1400	118	118	252	M10	M10
24,1	33,0	42,1	52,0	1AA010-042	1400	118	136	286	M10	M10
33,1	42,0	33,1	42,0	1AA010-076	1600	118	118	266	M10	M10
33,1	42,0	42,1	52,0	1AA010-094	1600	118	136	274	M10	M10
33,1	42,0	52,1	63,0	1AA010-121	1600	118	136	282	M10	M10
42,1	52,0	42,1	52,0	1AA010-102	2300	136	136	298	M10	M10

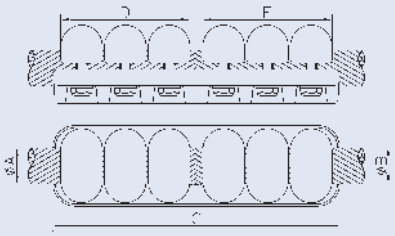

AL-Straight-Connector

Tube-Conductor

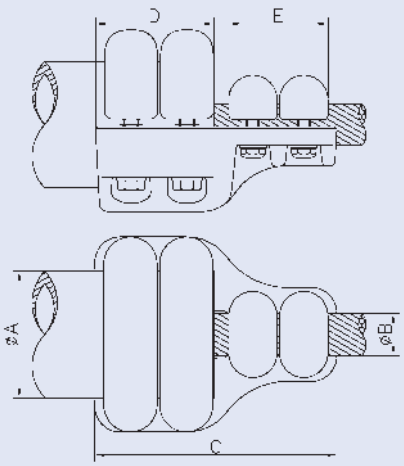

Dimension of Conductor			Code	Technical Data of Connector					
ØA	ØB			Max. Current	Dim. of Connector			Bolt Dim.	
	Min.	Max.			D	E	C	ØA	ØB
63,0	16,1	24,0	1AA010-109	1000	96	70	186	M10	M10
63,0	24,1	33,0	1AA010-110	1250	96	78	193	M10	M10
63,0	33,1	42,0	1BA010-052	1400	96	78	193	M10	M10
63,0	42,1	52,0	1AA010-123	1700	96	90	208	M10	M10
63,0	52,1	63,0	1AA010-116	2200	96	90	202	M10	M10
80,0	16,1	24,0	1AA010-126	1000	87	70	174	M12	M10
80,0	24,1	33,0	1AA010-128	1250	87	78	182	M12	M10
100,0	16,1	24,0	1AA010-142	1000	93	70	175	M12	M10
100,0	33,1	42,0	1AA010-146	1400	93	78	191	M12	M10
100,0	52,1	63,0	1AA010-158	2200	93	90	194	M12	M10
120,0	5,0	16,0	1BA010-063	450	87	62	168	M12	M8
120,0	24,1	33,0	1AA010-162	1250	87	78	186	M12	M10
120,0	33,1	42,0	1AA010-227	1400	87	78	200	M12	M10
120,0	52,1	63,0	1AA010-163	2200	87	90	200	M12	M10
125,0	5,0	16,0	1BA010-063	450	87	62	168	M12	M8
125,0	24,1	33,0	1AA010-162	1250	87	78	186	M12	M10
125,0	33,1	42,0	1AA010-227	1400	87	78	200	M12	M10
125,0	52,1	63,0	1AA010-163	2200	87	90	200	M12	M10

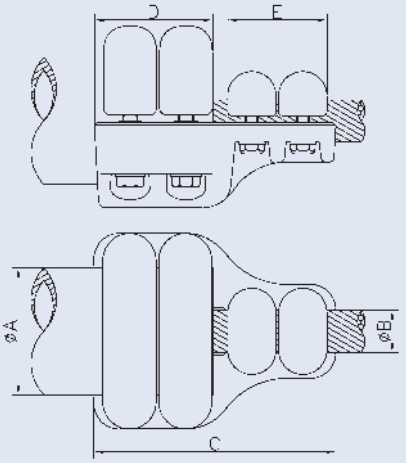

1,5“	16,1	24,0	1AA010-082	1000	95	70	183	M10	M10
1,5“	24,1	33,0	1AA010-038	1250	95	78	192	M10	M10
1,5“	33,1	42,0	1AA010-088	1400	95	78	180	M10	M10
1,5“	42,1	52,0	1AA010-100	1700	95	90	194	M10	M10
1,5“	52,1	63,0	1AA010-123	1700	95	90	208	M10	M10
2“	16,1	24,0	1AA010-109	1000	96	70	186	M10	M10
2“	24,1	33,0	1AA010-110	1250	96	78	193	M10	M10
2“	33,1	42,0	1BA010-052	1400	96	78	193	M10	M10
2“	42,1	52,0	1AA010-123	1700	96	90	208	M10	M10
2“	52,1	63,0	1AA010-116	2200	96	90	202	M10	M10
2,5“	16,1	24,0	1AA010-126	1000	87	70	174	M12	M10
2,5“	24,1	33,0	1AA010-128	1250	87	78	182	M12	M10
3“	52,1	63,0	1AA010-154	2200	87	90	185	M12	M10
3,5“	16,1	24,0	1AA010-142	1000	93	70	175	M12	M10
3,5“	33,1	42,0	1AA010-146	1400	93	78	191	M12	M10
3,5“	52,1	63,0	1AA010-158	2200	93	90	194	M12	M10
4“	5,0	16,0	1BA010-063	450	87	62	168	M12	M8
4“	24,1	33,0	1AA010-162	1250	87	78	186	M12	M10

AL-Straight-Connector

Tube-Conductor

Dimension of Conductor			Code	Technical Data of Connector					
ØA	ØB			Max. Current	Dim. of Connector			Bolt Dim.	
	Min.	Max.			D	E	C	ØA	ØB
4“	33,1	42,0	1AA010-227	1400	87	78	200	M12	M10
4“	52,1	63,0	1AA010-163	2200	87	90	200	M12	M10

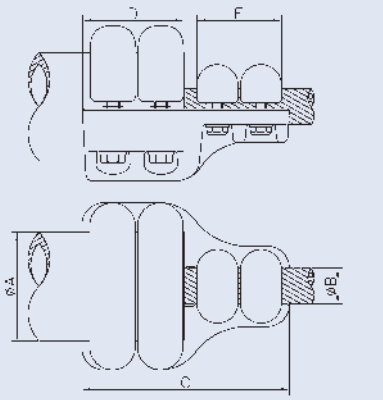

63,0	24,1	33,0	1AA010-106	1400	96	118	233	M10	M10
63,0	33,1	42,0	1AA010-114	1600	96	118	236	M10	M10
63,0	24,1	33,0	1AA010-130	1400	87	118	222	M12	M10
80,0	33,1	42,0	1AA010-134	1600	87	118	226	M12	M10
100,0	24,1	33,0	1AA010-144	1400	93	118	230	M12	M10
100,0	33,1	42,0	1AA010-148	1600	93	118	227	M12	M10
120,0	24,1	33,0	1AA010-164	1400	87	118	226	M12	M10
120,0	42,1	52,0	1AA010-168	2300	87	118	225	M12	M10
125,0	24,1	33,0	1AA010-164	1400	87	118	226	M12	M10
125,0	42,1	52,0	1AA010-168	2300	87	118	225	M12	M10

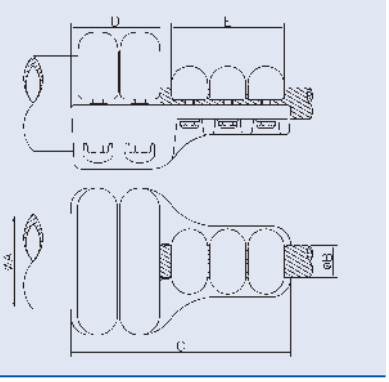

1,5“	16,1	24,0	1AA010-037	1000	95	106	227	M10	M10
1,5“	24,1	33,0	1AA010-040	1400	95	118	218	M10	M10
2“	24,1	33,0	1AA010-106	1400	96	118	233	M10	M10
2“	33,1	42,0	1AA010-114	1600	96	118	236	M10	M10
2,5“	24,1	33,0	1AA010-130	1400	87	118	222	M12	M10
2,5“	33,1	42,0	1AA010-134	1600	87	118	226	M12	M10
3,5“	24,1	33,0	1AA010-144	1400	93	118	230	M12	M10
3,5“	33,1	42,0	1AA010-148	1600	93	118	227	M12	M10
4“	24,1	33,0	1AA010-164	1400	87	118	226	M12	M10
4“	42,1	52,0	1AA010-168	2300	87	118	225	M12	M10

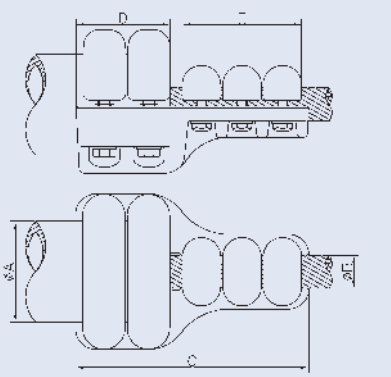

AL-Straight-Connector

Tube-Conductor

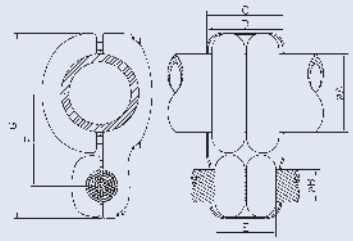

Dim. of Conductor			Code	Technical Data of Connector							
ØA	ØB			Max. Current	Dim. of Connector					Bolt Dim.	
	Min.	Max.			D	E	F	C	G	ØA	ØB
63,0	16,1	24,0	1BA510-040	1000	98	70	86	98	173	M10	M10
80,0	16,1	24,0	1BA510-050	1000	96	70	102	96	204	M12	M10
100,0	16,1	24,0	1BA510-060	1000	98	70	115	98	226	M12	M10
140,0	16,1	24,0	1BA510-075	2000	102	70	142	102	286	M12	M10
160,0	16,1	24,0	1BA510-075	2000	102	70	142	102	286	M12	M10
2“	16,1	24,0	1BA510-040	1000	98	70	86	98	173	M10	M10
2,5“	16,1	24,0	1BA510-050	1000	96	70	102	96	204	M12	M10
3,5“	16,1	24,0	1BA510-060	1000	98	70	115	98	226	M12	M10
5“	16,1	24,0	1BA510-075	2000	102	70	142	102	286	M12	M10

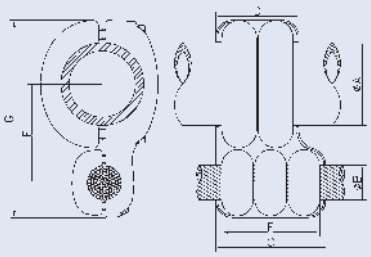

63,0	24,1	33,0	1BA510-042	1400	98	118	88	132	178	M10	M10
80,0	24,1	33,0	1BA510-054	1400	96	118	106	132	212	M12	M10
100,0	24,1	33,0	1BA510-062	1400	100	118	116	140	230	M12	M10
100,0	33,1	42,0	1BA510-065	1600	100	118	120	132	238	M12	M10
120,0	33,1	42,0	1BA510-142	1600	102	118	150	136	291	M12	M10
120,0	42,1	44,0	1BA510-143	1600	102	118	150	136	291	M12	M10
2“	24,1	33,0	1BA510-054	1400	96	118	106	132	212	M12	M10
2,5“	24,1	33,0	1BA510-054	1400	96	118	106	132	212	M12	M10
3“	16,1	24,0	1BA510-057	1000	96	106	115	228	222	M12	M10
3“	52,1	63,0	1BA510-059	2500	96	136	130	148	235	M12	M12
3,5“	24,1	33,0	1BA510-062	1400	100	118	116	140	230	M12	M10
3,5“	33,1	42,0	1BA510-065	1600	100	118	120	132	238	M12	M10
4“	33,1	42,0	1BA510-142	1600	102	118	150	136	291	M12	M10
4“	42,1	44,0	1BA510-143	1600	102	118	150	136	291	M12	M10
4,5“	33,1	42,0	1BA510-142	1600	102	118	150	136	291	M12	M10
4,5“	42,1	44,0	1BA510-143	1600	102	118	150	136	291	M12	M10

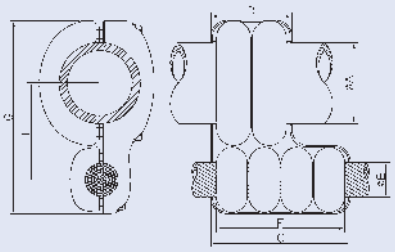

100,0	33,1	42,0	1BA510-066	2600	98	158	130	179	253	M12	M10
100,0	42,1	44,0	1BA510-067	2600	98	158	130	179	253	M12	M10
120,0	24,1	33,0	1BA510-121	2500	96	158	130	172	257	M12	M10
3,5“	33,1	42,0	1BA510-066	2600	98	158	130	179	253	M12	M10
3,5“	42,1	44,0	1BA510-067	2600	98	158	130	179	253	M12	M10
4“	24,1	33,0	1BA510-121	2500	96	158	130	172	257	M12	M10
4,5“	24,1	33,0	1BA510-121	2500	96	158	130	172	257	M12	M10

AL-Straight-Connector

Tube-Conductor

Dim. of Conductor			Code	Technical Data of Connector							
ØA	ØB			Max. Current	Dim. of Connector					Bolt Dim.	
	Min.	Max.			D	E	F	C	G	ØA	ØB
1,5“	16,1	24,0	1BA510-033	1000	146	106	80	156	162	M10	M10
1,5“	42,1	44,0	1BA510-039	1600	136	134	95	156	189	M10	M10
1,5“	44,1	52,0	1BA510-038	2300	136	136	200	146	295	M10	M10

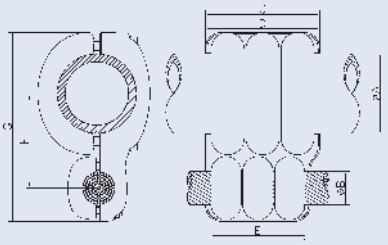

AL-Straight-Connector

Tube-Tube

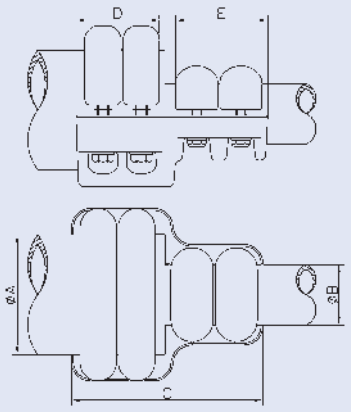

Dim. of Conductor		Code	Technical Data of Connector					
ØA	ØB		Max. Current	Dim. of Connector			Bolt Dim.	
				D	E	C	ØA	ØB
63,0	63,0	1AA100-024	2200	103	103	210	M12	M12
80,0	80,0	1AA100-026	2800	105	105	220	M12	M12
100,0	63,0	1AA010-158	2200	93	96	195	M12	M10
120,0	63,0	1AA010-163	2200	87	96	200	M12	M10
120,0	100,0	1AA010-160	2600	87	93	190	M12	M12
125,0	63,0	1AA010-163	2200	87	96	200	M12	M10
125,0	100,0	1AA010-160	2600	87	93	190	M12	M12

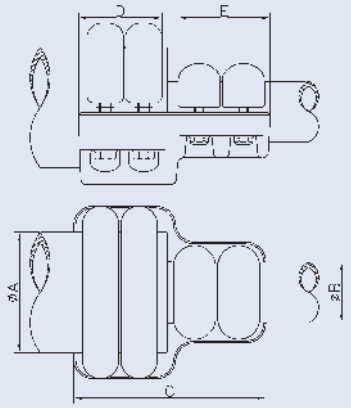

1,5“	1,5“	1AA100-022	2500	87	87	184	M12	M12
2“	1,5“	1AA010-123	1700	96	95	208	M10	M10
2“	2“	1AA100-024	2200	103	103	210	M12	M12
3“	2“	1AA010-154	2200	87	96	185	M12	M10
3“	3“	1AA010-157	2500	87	87	184	M12	M12
3,5“	2“	1AA010-158	2200	93	96	195	M12	M10
4“	2“	1AA010-163	2200	87	96	200	M12	M10
4“	3,5“	1AA010-160	2600	87	93	190	M12	M12

AL-Straight-Terminal

Stud-Conductor

Dimension of Conductor			Code	Technical Data of Connector					
ØA	ØB			Max. Current	Dim. of Connector			Bolt Dim.	
	Min.	Max.			D	E	C	ØA	ØB
30,0	5,0	16,0	1BA010-006	450	70	62	140	M10	M8
30,0	16,1	24,0	1BA010-012	1000	72	70	154	M10	M10
30,0	24,1	33,0	1BA010-019	1250	85	78	182	M10	M10
30,0	33,1	42,0	1BA010-032	1250	85	78	180	M10	M10
30,0	52,1	63,0	1BA010-052	1400	85	90	193	M10	M10
40,0	24,1	33,0	1BA010-032	1250	85	78	180	M10	M10
40,0	52,1	63,0	1BA010-052	1400	85	90	193	M10	M10
50,0	33,1	42,0	1BA010-052	1400	85	90	193	M10	M10
60,0	33,1	42,0	1BA010-052	1400	85	90	193	M10	M10

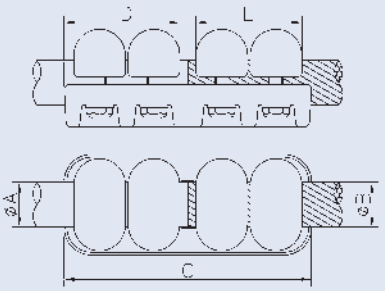

30,0	24,1	33,0	1BA010-027	1250	72	118	200	M10	M10
40,0	24,1	33,0	1BA010-046	1400	85	118	218	M10	M10

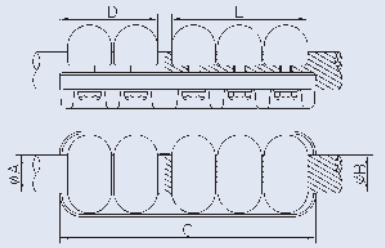

30,0	33,1	42,0	1BA010-040	1400	85	158	260	M10	M10
40,0	33,1	42,0	1BA010-040	1400	85	158	260	M10	M10
50,0	33,1	42,0	1BA010-056	2000	85	165	276	M10	M10
60,0	33,1	42,0	1BA010-056	2000	85	165	276	M10	M10

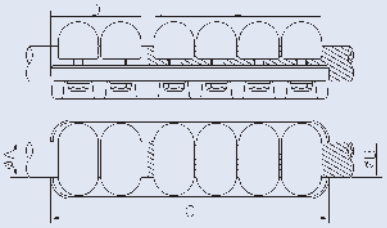

AL-Straight-Flat Terminal

Conductor-Flat terminal

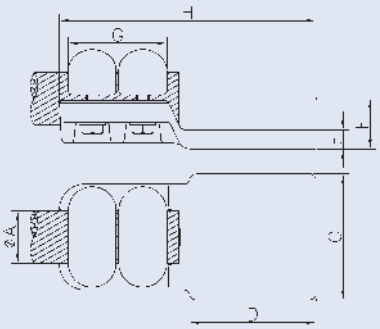

Dimension of Conductor				Code	Technical Data of Connector					
ØA		C	D		Max. Current	Dim. of Connector				Bolt Dim.
Min.	Max.					E	F	G	H	ØA
5,0	15,2	40	60	1CA010-008	450	8	18	50	121	M8
5,0	15,2	60	60	1CA010-009	450	8	22	62	135	M8
5,0	15,2	80	80	1CA010-014	450	8	28	62	158	M8
5,0	15,2	100	100	1CA010-018	450	8	22	62	173	M8
15,3	16,8	40	40	1CA010-034F	1000	15	30	70	123	M10
15,3	16,8	60	60	1CA010-046F	1000	15	30	70	143	M10
15,3	16,8	75	75	1CA010-052F	1000	15	30	70	158	M10
15,3	16,8	80	80	1CA010-056	800	10	23	70	160	M10
15,3	16,8	100	100	1CA010-062	1000	10	23	70	180	M10
15,3	16,8	125	125	1CA010-070	1000	12	28,5	70	214	M10
15,3	16,8	200	100	1CA010-071	1000	15	43	70	194	M10
16,9	25,0	40	40	1CA010-034	1000	15	30	70	123	M10
16,9	25,0	60	60	1CA010-046	1000	15	30	70	143	M10
16,9	25,0	75	75	1CA010-052	1000	15	30	70	158	M10
16,9	25,0	80	80	1CA010-056	800	10	23	70	160	M10
16,9	25,0	100	100	1CA010-062	1000	10	23	70	180	M10
16,9	25,0	125	125	1CA010-070	1000	12	28,5	70	214	M10
16,9	25,0	200	100	1CA010-071	1000	15	43	70	194	M10
25,1	26,5	40	40	1CA010-156F	600	15	50	78	149	M10
25,1	26,5	60	60	1CA010-157F	1250	15	50	78	169	M10
25,1	26,5	80	80	1CA010-152F	1250	15	50	78	189	M10
25,1	26,5	100	100	1CA010-170	1250	15	50	78	205	M10
25,1	26,5	125	125	1CA010-138	1250	15	50	78	240	M10
26,6	33,0	40	40	1CA010-156	600	15	50	78	149	M10
26,6	33,0	60	60	1CA010-157	1250	15	50	78	169	M10
26,6	33,0	80	80	1CA010-152	1250	15	50	78	189	M10
26,6	33,0	100	100	1CA010-170	1250	15	50	78	205	M10
26,6	33,0	125	125	1CA010-138	1250	15	50	78	240	M10
33,1	42,0	40	40	1CA010-206	600	15	37	78	139	M10
33,1	42,0	60	60	1CA010-208	1250	15	37	78	154	M10
33,1	42,0	80	80	1CA010-204	1400	15	37	78	185	M10
33,1	42,0	100	100	1CA010-202	1400	15	40	78	203	M10
33,1	42,0	125	125	1CA010-031	1400	15	50	78	233	M10
42,1	52,0	80	80	1CA010-308	1700	20	65	90	194	M10
42,1	52,0	100	100	1CA010-310	1700	20	65	90	214	M10
42,1	52,0	200	100	1CA010-276	1700	15	65	90	215	M10
52,1	63,0	80	80	1CA010-326	2000	20	85	90	196	M10

AL-Straight-Flat Terminal

Conductor-Flat terminal

Dimension of Conductor				Code	Technical Data of Connector					
ØA		C	D		Max. Current	Dim. of Connector				Bolt Dim.
Min.	Max.					E	F	G	H	ØA
52,1	63,0	100	100	1CA010-328	2200	20	85	90	215	M10
52,1	63,0	125	125	1CA010-320	2200	25	75	90	240	M10
52,1	63,0	200	100	1CA010-331	2200	20	85	90	218	M10

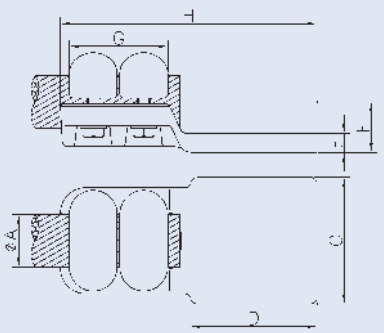

AL-Straight-Flat Terminal

Conductor-Flat terminal

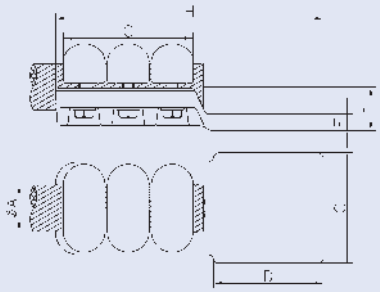

Dimension of Conductor				Code	Technical Data of Connector					
ØA		C	D		Max. Current	Dim. of Connector				Bolt Dim.
Min.	Max.					E	F	G	H	ØA
16,0	19,4	100	100	1CA010-064	1000	12	27	106	225	M10
19,5	20,5	40	40	1CA010-077F	300	12	40	106	171	M10
19,5	20,5	60	60	1CA010-076F	800	12	40	106	171	M10
19,5	20,5	80	80	1CA010-082F	1000	12	40	106	211	M10
19,5	20,5	100	100	1CA010-084F	1000	12	40	106	231	M10
20,6	21,9	40	40	1CA010-077	300	12	40	106	171	M10
20,6	21,9	60	60	1CA010-076	800	12	40	106	171	M10
20,6	21,9	80	80	1CA010-082	1000	12	40	106	211	M10
20,6	21,9	100	100	1CA010-084	1000	12	40	106	231	M10
22,0	23,0	40	40	1CA010-093	450	15	44	118	185	M10
22,0	23,0	60	60	1CA010-094	1250	15	44	118	205	M10
22,0	23,0	75	75	1CA010-100	1400	15	50	118	224	M10
22,0	23,0	100	100	1CA010-085F	1000	12	40	106	231	M10
22,0	23,0	125	125	1CA010-144	1400	15	50	118	280	M10
22,0	23,0	200	100	1CA010-173	1400	15	50	118	246	M10
23,1	24,5	40	40	1CA010-093	450	15	44	118	185	M10
23,1	24,5	60	60	1CA010-094	1250	15	44	118	205	M10
23,1	24,5	75	75	1CA010-100	1400	15	50	118	224	M10
23,1	24,5	100	100	1CA010-085	1000	12	40	106	231	M10
23,1	24,5	125	125	1CA010-144	1400	15	50	118	280	M10
23,1	24,5	200	100	1CA010-173	1400	15	50	118	246	M10
24,5	25,5	40	40	1CA010-093	450	15	44	118	185	M10
24,5	25,5	60	60	1CA010-094	1250	15	44	118	205	M10
24,5	25,5	75	75	1CA010-100	1400	15	50	118	224	M10
24,5	25,5	100	100	1CA010-122	1400	15	50	118	250	M10
24,5	25,5	125	125	1CA010-144	1400	15	50	118	280	M10
24,5	25,5	200	100	1CA010-173	1400	15	50	118	246	M10
25,6	27,0	40	40	1CA010-093	450	15	44	118	185	M10
25,6	27,0	60	60	1CA010-094	1250	15	44	118	205	M10
25,6	27,0	75	75	1CA010-100	1400	15	50	118	224	M10
25,6	27,0	100	100	1CA010-165F	1250	12	47	118	250	M10
25,6	27,0	125	125	1CA010-144	1400	15	50	118	280	M10
25,6	27,0	200	100	1CA010-173	1400	15	50	118	246	M10
27,1	31,4	40	40	1CA010-093	450	15	44	118	185	M10
27,1	31,4	60	60	1CA010-094	1250	15	44	118	205	M10
27,1	31,4	75	75	1CA010-100	1400	15	50	118	224	M10
27,1	31,4	100	100	1CA010-165	1250	12	47	118	250	M10

AL-Straight-Flat Terminal

Conductor-Flat terminal

Dimension of Conductor				Code	Technical Data of Connector					
ØA		C	D		Max. Current	Dim. of Connector				Bolt Dim.
Min.	Max.					E	F	G	H	ØA
27,1	31,4	125	125	1CA010-144	1400	15	50	118	280	M10
27,1	31,4	200	100	1CA010-173	1400	15	50	118	246	M10
31,5	32,2	40	40	1CA010-093	450	15	44	118	185	M10
31,5	32,2	60	60	1CA010-178F	1250	15	50	118	209	M10
31,5	32,2	75	75	1CA010-176F	1400	15	50	118	224	M10
31,5	32,2	100	100	1CA010-186F	1600	12	47	118	250	M10
31,5	32,2	125	125	1CA010-144	1400	15	50	118	280	M10
31,5	32,2	200	100	1CA010-173	1400	15	50	118	246	M10
32,3	33,0	40	40	1CA010-093	450	15	44	118	185	M10
32,3	33,0	60	60	1CA010-178	1250	15	50	118	209	M10
32,3	33,0	75	75	1CA010-176	1400	15	50	118	224	M10
32,3	33,0	100	100	1CA010-186F	1600	12	47	118	250	M10
32,3	33,0	125	125	1CA010-144	1400	15	50	118	280	M10
32,3	33,0	200	100	1CA010-173	1400	15	50	118	246	M10
33,1	42,0	60	60	1CA010-236	1256	15	50	118	213	M10
33,1	42,0	75	75	1CA010-230	1600	25	60	118	227	M10
33,1	42,0	80	80	1CA010-238	1600	15	50	118	233	M10
33,1	42,0	100	100	1CA010-234	1600	15	50	118	253	M10
33,1	42,0	120	120	1CA010-242	2000	15	50	118	273	M10
33,1	42,0	200	100	1CA010-272	1600	15	50	118	252	M10
42,1	52,0	100	100	1CA010-278	2000	25	65	136	260	M10

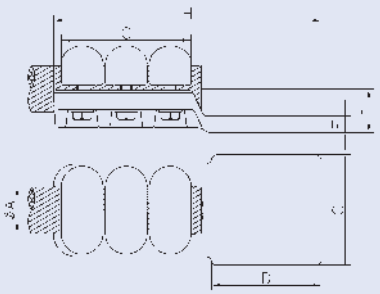

AL-Straight-Flat Terminal

Conductor-Flat Terminal

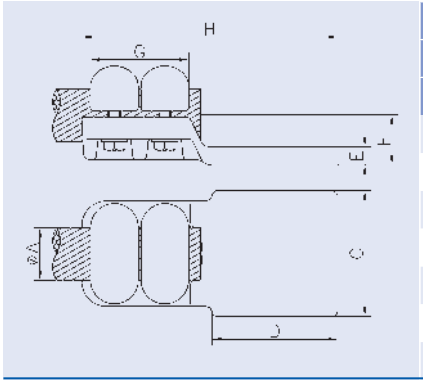

Dimension of Conductor				Code	Technical Data of Connector					
ØA		C	D		Max. Current	Dim. of Connector				Bolt Dim.
Min.	Max.					E	F	G	H	ØA
5,0	16,0	127	160	1CA018-014	450	8	28	62	245	M8
24,1	33,0	127	160	1CA018-030	1250	15	50	78	275	M10
52,1	63,0	120	150	1CA018-060	2200	25	90	90	265	M10
100,0	102,0	127	160	1CA018-100	2600	20	100	93	280	M12

AL-Straight-Flat Terminal

Tube-Flat terminal

Dimension of Conductor			Code	Technical Data of Connector					
				Max. Current	Dim. of Connector				Bolt Dim.
ØA	C	D			E	F	G	H	ØA
63,0	80	80	1CA010-320	2200	20	75	96	240	M10
63,0	100	100	1CA010-328	2200	20	85	96	215	M10
63,0	125	125	1CA010-320	2200	25	75	96	240	M10
63,0	200	100	1CA010-331	2200	20	85	96	218	M10
80,0	80	80	1CA010-346	2000	25	80	87	178	M12
80,0	100	100	1CA010-353	2400	25	90	87	210	M12
80,0	125	125	1CA010-362	2400	25	80	87	235	M12
80,0	200	100	1CA010-354	2500	20	80	87	210	M12
100,0	75	75	1CA010-372	2500	30	105	93	193	M12
100,0	80	80	1CA010-373	2000	30	150	93	190	M12
100,0	100	100	1CA010-378	2000	25	120	93	220	M12
100,0	125	125	1CA010-386	2600	25	120	93	245	M12

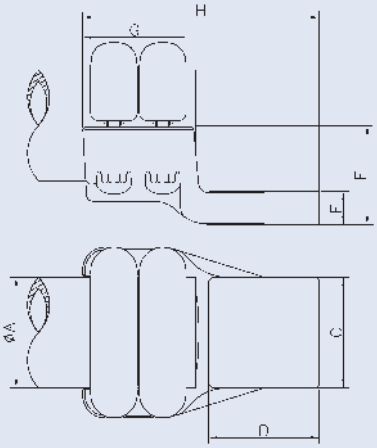

1,5"	100	100	1CA010-310	1700	20	65	95	214	M10
1,5"	200	100	1CA010-276	1700	15	65	95	215	M10
2"	80	80	1CA010-320	2200	20	75	96	240	M10
2"	100	100	1CA010-328	2200	20	85	96	215	M10
2"	125	125	1CA010-320	2200	25	75	96	240	M10
2"	200	100	1CA010-331	2200	20	85	96	218	M10
2,5"	80	80	1CA010-346	2000	25	80	87	178	M12
2,5"	100	100	1CA010-353	2400	25	90	87	210	M12
2,5"	125	125	1CA010-362	2400	25	80	87	235	M12
2,5"	200	100	1CA010-354	2500	20	80	87	210	M12
3"	200	100	1CA010-392	2500	20	120	87	215	M12
3,5"	75	75	1CA010-372	2500	30	105	93	193	M12
3,5"	80	80	1CA010-373	2000	30	150	93	190	M12
3,5"	100	100	1CA010-378	2000	25	120	93	220	M12
3,5"	125	125	1CA010-386	2600	25	120	93	245	M12

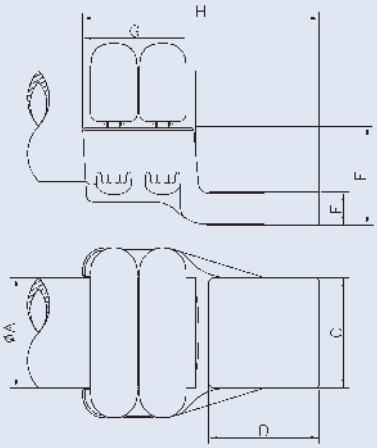

AL-Straight-Flat Terminal

Tube-Flat terminal

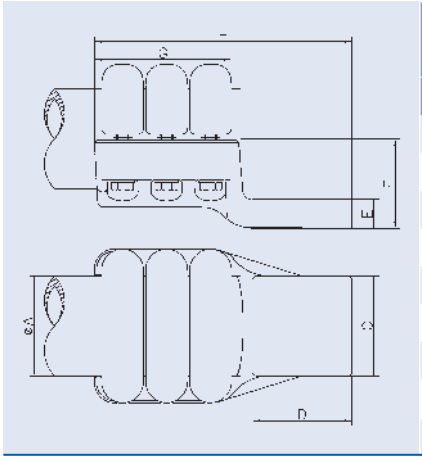

Dimension of Conductor			Code	Technical Data of Connector					
				Max. Current	Dim. of Connector				Bolt Dim.
ØA	C	D			E	F	G	H	ØA
80,0	75	75	1CA010-349	2500	30	90	127	227	M12
80,0	100	100	1CA010-361	3200	30	90	127	252	M12
100,0	100	100	1CA010-387	3150	30	90	137	258	M12
100,0	200	100	1CA010-103	3600	25	100	137	259	M12

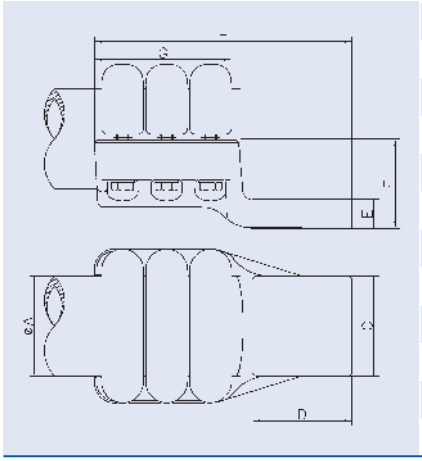

1,5“	100	100	1CA010-278	2000	25	65	139	260	M12
2,5“	75	75	1CA010-349	2500	30	90	127	227	M12
2,5“	100	100	1CA010-361	3200	30	90	127	252	M12
3,5“	100	100	1CA010-387	3150	30	90	137	258	M12
3,5“	200	100	1CA010-103	3600	25	100	137	259	M12

AL-Straight-Flat Terminal

Stud-Flat terminal

Dimension of Conductor			Code	Technical Data of Connector					
				Max. Current	Dim. of Connector				Bolt Dim.
ØA	C	D			E	F	G	H	ØA
30,0	40	40	1CA010-156	600	15	50	78	149	M10
30,0	60	60	1CA010-157	1250	15	50	78	169	M10
30,0	80	80	1CA010-152	1250	15	50	78	189	M10
30,0	100	100	1CA010-170	1250	15	50	85	205	M10
30,0	125	125	1CA010-138	1250	15	50	85	240	M10
40,0	40	40	1CA010-206	600	15	37	85	139	M10
40,0	60	60	1CA010-208	1250	15	37	85	154	M10
40,0	80	80	1CA010-204	1400	15	37	85	185	M10
40,0	100	100	1CA010-202	1400	15	40	85	203	M10
40,0	125	125	1CA010-031	1400	15	50	85	233	M10
50,0	80	80	1CA010-308	2000	20	65	95	165	M10
50,0	100	100	1CA010-310	1700	20	65	95	214	M10
50,0	200	100	1CA010-276	1700	15	65	95	215	M10
60,0	80	80	1CA010-326	2000	20	70	96	196	M10
60,0	100	100	1CA010-328	2200	20	85	96	215	M10
60,0	125	125	1CA010-320	2200	25	75	96	240	M10
60,0	200	100	1CA010-331	2200	20	85	96	218	M10

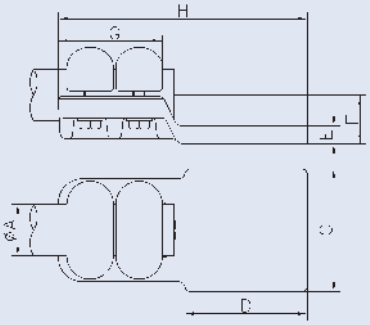

30,0	40	40	1CA010-093	450	15	44	118	185	M10
30,0	60	60	1CA010-094	1250	15	44	118	205	M10
30,0	75	75	1CA010-100	1400	15	50	118	224	M10
30,0	100	100	1CA010-165	1250	12	47	118	250	M10
30,0	125	125	1CA010-144	1400	15	50	118	280	M10
30,0	200	100	1CA010-173	1400	15	50	118	246	M10
40,0	60	60	1CA010-236	1250	15	50	118	213	M10
40,0	75	75	1CA010-230	1600	25	60	118	227	M10
40,0	80	80	1CA010-238	1600	15	50	118	233	M10
40,0	100	100	1CA010-234	1600	15	50	118	253	M10
40,0	120	120	1CA010-242	2000	15	50	118	273	M10
40,0	200	100	1CA010-272	1600	15	50	118	252	M10
50,0	100	100	1CA010-278	2000	25	65	136	260	M10

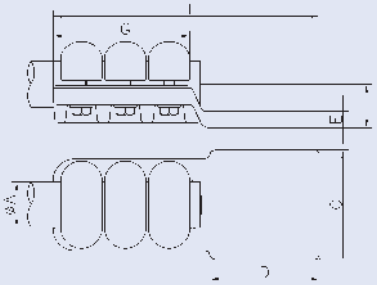

AL-Straight-Welded-Connector

Tube-Tube

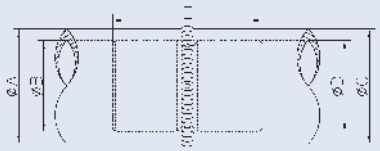

Dimension of Conductor						Code	Dimension of Connector
ØA	ØB		ØC	ØD			
	Min.	Ma.		Min.	Max.		E
63,0	44,0	52,0	63,0	44,0	52,0	1AA200-060	80
80,0	64,0	64,0	80,0	64,0	64,0	1AA200-079	100
80,0	60,0	60,0	80,0	60,0	60,0	1AA200-080	100
100,0	80,0	80,0	100,0	80,0	80,0	1AA200-029	130
120,0	100,0	100,0	120,0	100,0	100,0	1AA210-100	160
120,0	104,0	104,0	120,0	104,0	104,0	1AA210-120	160
140,0	126,0	128,0	140,0	126,0	128,0	1AA210-142	200
160,0	140,0	144,0	140,0	126,0	128,0	1AA201-140	65
160,0	140,0	144,0	160,0	140,0	144,0	1AA210-160	180
200,0	180,0	184,0	200,0	180,0	184,0	1AA210-200	200
250,0	226,0	234,0	250,0	226,0	234,0	1AA210-250	200
250,0	236,0	240,0	250,0	236,0	240,0	1AA210-251	200
300,0	268,0	276,0	300,0	268,0	276,0	1AA210-201	200

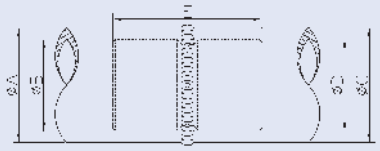

2“	44,0	52,0	2“	44,0	52,0	1AA200-060	80
3“	73,5	73,5	3“	73,5	73,5	1AA210-089	130
3“	77,7	77,7	3“	77,7	77,7	1AA210-088	130
4“	101,6	101,6	4“	101,6	101,6	1AA210-120	160
5“	128,6	128,6	5“	128,6	128,6	1AA210-142	200
6“	146,3	146,3	6“	146,3	146,3	1AA210-168	180

AL-Straight-Welded-Flat Terminal

Tube-Flat terminal

Dimension of Conductor					Code	Technical Data of Connector			
ØA	ØB		C	D		Max. Current	Dim. of Connector		
	Min.	Max.					E	F	G
63,0	47,0	55,0	75,0	75,0	1CA084-060	1600	15	107	120
80,0	60,0	72,0	100,0	100,0	1CA084-080	2000	25	132	180
100,0	80,0	80,0	100,0	100,0	1CA084-100	3500	35	141	155
120,0	100,0	100,0	100,0	100,0	1CA084-121	2000	20	137	150
120,0	101,0	104,0	100,0	100,0	1CA084-122	2000	20	135	150
120,0	105,0	110,0	100,0	100,0	1CA084-120	2000	20	137	150
140,0	122,0	122,0	100,0	100,0	1CA084-141	3000	30	147	160
140,0	122,0	128,0	150,0	100,0	1CA084-143	3000	30	132	145
140,0	122,0	128,0	150,0	150,0	1CA084-142	3100	35	182	195
160,0	140,0	144,0	100,0	100,0	1CA084-163	2500	25	134	150
160,0	145,0	150,0	100,0	100,0	1CA084-161	2500	30	131	150
160,0	140,0	144,0	125,0	125,0	1CA084-160	4000	35	159	175

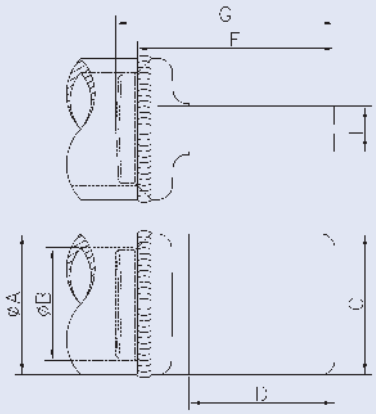

1,5“	37,0	41,0	75,0	75,0	1CA084-050	1600	15	101	114
2“	47,0	55,0	75,0	75,0	1CA084-060	1600	15	107	120
3“	73,0	78,0	75,0	75,0	1CA084-090	1600	15	112	125
3“	73,0	78,0	80,0	80,0	1CA084-095	2000	25	117	130
5“	122,0	123,0	100,0	100,0	1CA084-141	3000	30	147	160
5“	122,0	129,0	150,0	100,0	1CA084-143	3000	30	132	145
5“	122,0	129,0	150,0	150,0	1CA084-142	3100	35	182	195

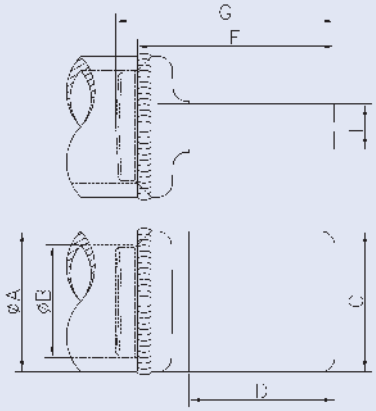

AL-Suspension-Connector

Conductor

Figur 1

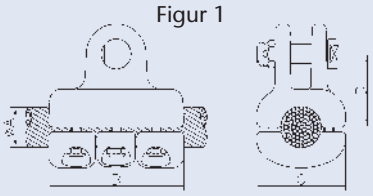

Figur 2

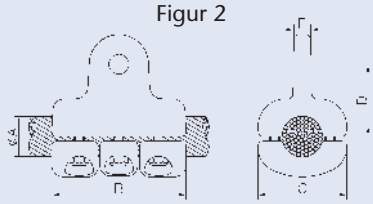

Dim. of Conductor ØA		Code	Technical Data of Connector						
			Dim. of Connector			Bolt	Suspension		
Min.	Max.		B	C	D	Dim. ØA	Bolt Dim.	Figur	E
24,1	33,0	1SA100-033	118	80	70	M10	Ø19	1	
24,1	33,0	1SA100-034	118	80	70	M10	Ø22	1	
33,1	42,0	1SA100-046	136	90	73	M10	Ø19	1	
33,1	42,0	1SA100-044	118	90	70	M10	Ø22	1	
33,1	42,0	1SA100-049	118	90	75	M10	Ø19	2	18
42,1	52,0	1SA100-056	130	100	88	M10	Ø22	1	
52,1	63,0	1SA100-060	160	118	90	M10	Ø19	1	

AL-Parallel-Groove-Clamp

Conductor-Conductor

Dimension of Conductor				Code	Technical Data of Connector					
ØA		ØB			Max. Current	Dim. of Connector			Bolts	
Min.	Max.	Min.	Max.			C	D	E	Dim.	pcs.
9,0	9,9	9,0	9,9	1PA100-020	280	70	45	26	M10	2
10,3	12,5	10,3	12,5	1PA100-050	340	65	43	28	M10	2
12,5	13,6	12,5	13,6	1PA100-060	350	65	50	28	M12	2
12,6	14,9	12,6	14,9	1PA100-070	420	90	48	28	M10	3
15,0	17,1	15,0	17,1	1PA100-100	450	90	48	28	M10	3
17,2	19,0	17,2	19,0	1PA100-140	600	100	59	34	M12	3
19,1	21,0	19,1	21,0	1PA100-160	700	100	61	34	M12	3
21,1	23,4	21,1	23,4	1PA100-200	800	120	73	40	M12	3
23,5	25,7	23,5	25,7	1PA100-230	850	120	72	40	M12	3
25,8	27,8	25,8	27,8	1PA100-260	900	130	78	44	M12	3
27,9	29,9	27,9	29,9	1PA100-310	900	130	80	44	M12	3
30,0	31,9	30,0	31,9	1PA100-350	1140	140	90	49	M12	3
32,0	33,4	32,0	33,4	1PA100-360	1140	140	90	49	M12	3

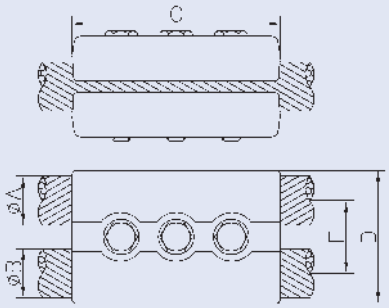

7,0	11,7	14,0	20,1	1PA500-020	300	70	58	33	M10	2
12,0	24,2	12,0	24,2	1PA500-030	700	83	75	45	M12	2
9,0	9,9	15,0	17,3	1PA500-005	280	98	56	31	M10	3
16,0	20,1	15,0	17,3	1PA500-050	600	98	56	31	M10	3
21,8	33,0	16,3	21,7	1PA500-070	1140	140	90	49	M12	3
21,8	33,0	21,8	33,0	1PA500-071	1140	140	90	49	M12	3

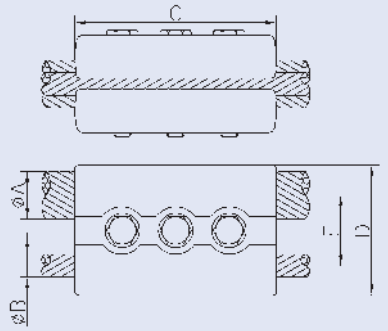

AL-T-Connector

Conductor-Conductor

Dimension of Conductor				Code	Technical Data of Connector					
ØA		ØB			Max. Current	Dim. of Connector			Bolt Dim.	
Min.	Max.	Min.	Max.			D	E	C	ØA	ØB
5,0	16,0	5,0	16,0	1AB010-002	450	62	62	120	M8	M8
5,0	16,0	24,1	33,0	1AB010-006	450	62	78	137	M8	M10
16,1	24,0	5,0	16,0	1AB010-010	450	70	62	145	M10	M8
16,1	24,0	16,1	24,0	1AB010-016	1000	70	70	148	M10	M10
16,1	24,0	24,1	33,0	1AB010-030	1000	70	78	164	M10	M10
16,1	24,0	33,1	42,0	1AB010-046	1000	70	78	166	M10	M10
24,1	33,0	5,0	16,0	1AB010-062	450	78	62	178	M10	M10
24,1	33,0	16,1	24,0	1AB010-068	1000	78	70	158	M10	M10
24,1	33,0	24,1	33,0	1AB010-078	1000	78	78	174	M10	M10
24,1	33,0	33,1	42,0	1AB010-092	1000	78	78	172	M10	M10
33,1	42,0	16,1	24,0	1AB010-138	1000	78	70	168	M10	M10
33,1	42,0	24,1	33,0	1AB010-148	1250	78	78	184	M10	M10
33,1	42,0	33,1	42,0	1AB010-162	1400	78	78	182	M10	M10
42,1	52,0	24,1	33,0	1AB010-230	1250	90	78	186	M10	M10
42,1	52,0	33,1	42,0	1AB010-228	1400	90	78	187	M10	M10
42,1	52,0	42,1	52,0	1AB010-244	1700	90	90	198	M10	M10
52,1	63,0	16,1	24,0	1AB010-250	1000	90	70	190	M10	M10
52,1	63,0	24,1	33,0	1AB010-264	1250	90	78	198	M10	M10
52,1	63,0	42,1	52,0	1AB010-260	1800	90	90	209	M10	M10
52,1	63,0	52,1	63,0	1AB010-268	2200	90	90	213	M10	M10

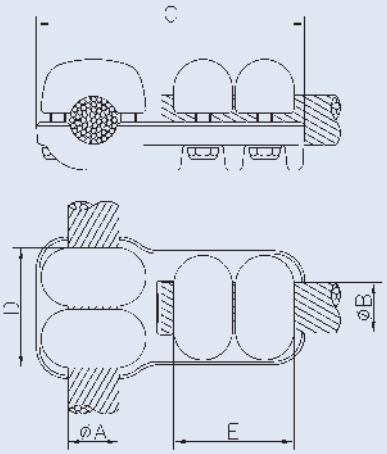

16,1	24,0	24,1	33,0	1AB010-040	1000	70	118	190	M10	M10
24,1	33,0	16,1	24,0	1AB010-070	1000	78	106	184	M10	M10
24,1	33,0	24,1	33,0	1AB010-086	1250	78	118	196	M10	M10
24,1	33,0	33,1	42,0	1AB010-100	1250	78	118	196	M10	M10
33,1	42,0	16,0	24,0	1AB010-140	1000	78	106	204	M10	M10
33,1	42,0	24,1	33,0	1AB010-189	1400	78	118	224	M10	M10
33,1	42,0	33,1	42,0	1AB010-172	1400	78	118	222	M10	M10
42,1	52,0	24,1	33,0	1AB010-220	1400	90	118	237	M10	M10
52,1	63,0	24,1	33,0	1AB010-256	1600	90	118	255	M10	M10
52,1	63,0	33,1	42,0	1AB010-266	1400	90	118	236	M10	M10

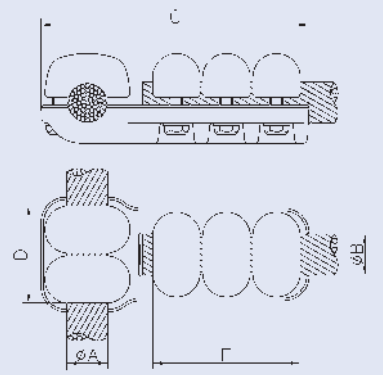

AL-T-Connector

Conductor-Conductor

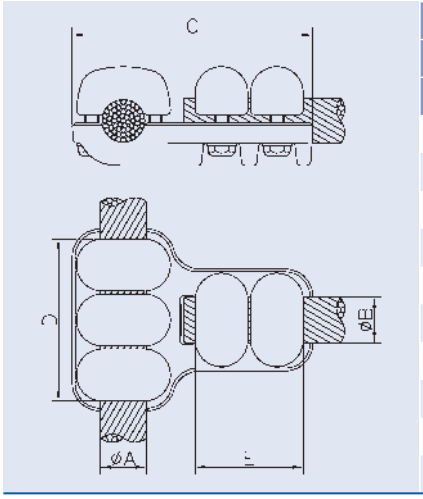

Dimension of Conductor				Code	Technical Data of Connector					
ØA		ØB			Max. Current	Dim. of Connector			Bolt Dim.	
Min.	Max.	Min.	Max.			D	E	C	ØA	ØB
16,1	24,0	16,0	24,0	1AB010-020	800	106	70	142	M10	M10
16,1	24,0	24,1	33,0	1AB010-038	800	106	78	152	M10	M10
16,1	24,0	33,1	42,0	1AB010-048	1000	106	78	165	M10	M10
24,1	33,0	24,1	33,0	1AB010-084	1250	118	78	161	M10	M10
24,1	33,0	33,1	42,0	1AB010-096	1400	118	78	166	M10	M10
24,1	33,0	42,1	52,0	1AB010-110	1600	118	90	177	M10	M10
24,1	33,0	52,1	63,0	1AB010-112	1600	118	90	180	M10	M10
33,1	42,0	24,1	33,0	1AB010-154	1250	118	78	168	M10	M10
33,1	42,0	33,1	42,0	1AB010-170	1400	118	78	182	M10	M10
33,1	42,0	52,1	63,0	1AB010-192	2000	118	90	185	M10	M10

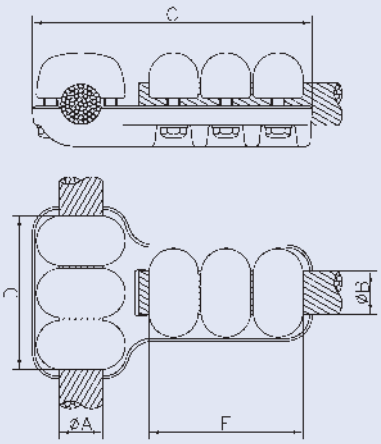

5,0	16,0	5,0	16,0	1AB010-003	450	94	94	156	M10	M10
16,1	21,7	16,1	24,0	1AB010-026	1000	106	106	186	M10	M10
16,1	21,7	24,1	33,0	1AB010-044	1000	106	118	204	M10	M10
16,1	21,7	33,1	42,0	1AB010-052	1000	106	118	206	M10	M10
16,1	21,7	42,1	44,0	1AB010-053	1000	106	118	209	M10	M10
21,8	24,0	16,1	21,7	1AB010-026	1000	106	106	186	M10	M10
21,8	24,0	21,8	24,0	1AB010-059	1000	106	106	166	M10	M10
21,8	24,0	24,1	33,0	1AB010-044	1000	106	118	204	M10	M10
21,8	24,0	33,1	42,0	1AB010-052	1000	106	118	206	M10	M10
21,8	24,0	42,1	44,0	1AB010-053	1000	106	118	209	M10	M10
24,1	25,4	16,1	24,0	1AB010-074	800	118	106	185	M10	M10
24,1	25,4	24,1	33,0	1AB010-122	1400	118	118	210	M10	M10
24,1	25,4	33,1	42,0	1AB010-102	1400	118	118	217	M10	M10
24,1	25,4	42,1	44,0	1AB010-106	1400	118	118	217	M10	M10
24,1	25,4	52,1	63,0	1AB010-116	2000	118	136	224	M10	M10
25,5	26,5	16,1	24,0	1AB010-074	800	118	106	185	M10	M10
25,5	26,5	24,1	25,4	1AB010-122	1400	118	118	210	M10	M10
25,5	26,5	25,5	33,0	1AB010-125	1400	118	118	203	M10	M10
25,5	26,5	33,1	42,0	1AB010-102	1400	118	118	217	M10	M10
25,5	26,5	42,1	44,0	1AB010-106	1400	118	118	217	M10	M10
25,5	26,5	52,1	63,0	1AB010-116	2000	118	136	224	M10	M10
26,6	31,4	16,1	24,0	1AB010-074	800	118	106	185	M10	M10
26,6	31,4	24,1	25,4	1AB010-122	1400	118	118	210	M10	M10
26,6	31,4	25,5	31,4	1AB010-125	1400	118	118	203	M10	M10
26,6	31,4	33,1	42,0	1AB010-102	1400	118	118	217	M10	M10
26,6	31,4	42,1	44,0	1AB010-106	1400	118	118	217	M10	M10

AL-T-Duplex-Connector

Conductor-Conductor

Dimension of Conductor				Code	Technical Data of Connector					
ØA		ØB			Max. Current	Dim. of Connector			Bolt Dim.	
Min.	Max.	Min.	Max.			D	E	C	ØA	ØB
26,6	31,4	52,1	63,0	1AB010-116	2000	118	136	224	M10	M10
31,5	33,0	16,1	24,0	1AB010-074	800	118	106	185	M10	M10
31,5	33,0	24,1	25,4	1AB010-122	1400	118	118	210	M10	M10
31,5	33,0	25,5	31,5	1AB010-125	1400	118	118	203	M10	M10
31,5	33,0	31,5	33,0	1AB010-126	1400	118	118	203	M10	M10
31,5	33,0	33,1	42,0	1AB010-102	1400	118	118	217	M10	M10
31,5	33,0	42,1	44,0	1AB010-106	1400	118	118	217	M10	M10
33,1	42,0	16,1	24,0	1AB010-144	1000	106	106	204	M10	M10
33,1	42,0	24,1	33,0	1AB010-158	1400	118	118	223	M10	M10
33,1	42,0	33,1	42,0	1AB010-174	1600	118	118	219	M10	M10
33,1	42,0	52,1	63,0	1AB010-196	2000	118	136	231	M10	M10
42,1	52,0	24,1	33,0	1AB010-224	1400	136	118	231	M10	M10
42,1	52,0	33,1	42,0	1AB010-232	2000	136	118	233	M10	M10
42,1	52,0	42,1	52,0	1AB010-236	2300	136	136	238	M10	M10

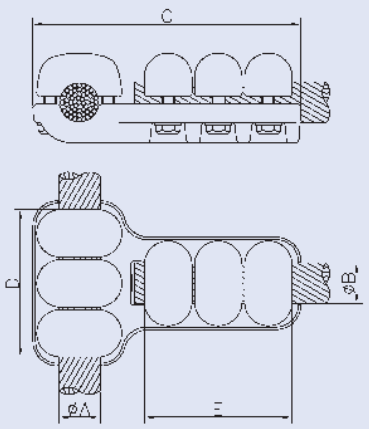

AL-T-Connector

Conductor-Conductor

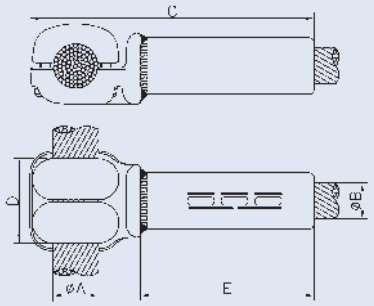

Dim. of Conductor				Code	Technical Data of Connector					
ØA		ØB			Max. Current	Dim. Connector			Bolt Dim. ØA	Inst. Die No.
Min.	Max.	Min.	Max.			D	E	C		
16,1	24,0	26,1	26,9	1AB050-005	900	70	105	195	M10	KZ 42
16,1	24,0	36,1	37,1	1AB050-010	1350	70	170	260	M10	KZ 58
33,1	42,0	31,7	32,8	1AB050-056	1200	78	160	260	M10	KZ 52
33,1	42,0	39,3	40,5	1AB050-076	1400	78	170	272	M10	KZ 62
42,1	52,0	22,5	23,0	1AB050-095	710	90	150	214	M10	KZ 34
52,1	63,0	29,0	29,9	1AB050-107	1000	90	160	283	M10	KZ 46
52,1	63,0	40,6	41,3	1AB050-114	1540	90	170	293	M10	KZ 62

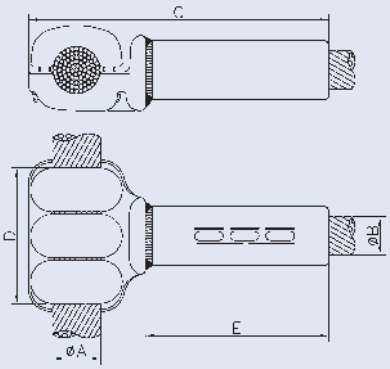

16,1	24,0	15,4	16,5	1AB050-003	400	106	105	195	M10	KZ 28
24,1	33,0	15,4	16,5	1AB050-017	400	118	105	197	M10	KZ 28
24,1	33,0	20,7	21,2	1AB050-022	650	118	105	197	M10	KZ 32
24,1	33,0	21,7	21,9	1AB050-024	650	118	105	197	M10	KZ 32
24,1	33,0	26,1	26,9	1AB050-029	900	118	105	197	M10	KZ 42
24,1	33,0	27,5	28,4	1AB050-030	950	118	105	197	M10	KZ 42
24,1	33,0	29,0	29,9	1AB050-032	1000	118	160	252	M10	KZ 46
24,1	33,0	31,7	32,8	1AB050-036	1200	118	160	252	M10	KZ 52
24,1	33,0	36,1	37,1	1AB050-044	1350	118	170	262	M10	KZ 58
24,1	33,0	37,2	38,6	1AB050-046	1350	118	170	262	M10	KZ 60
24,1	33,0	39,3	40,5	1AB050-048	1400	118	170	262	M10	KZ 62
33,1	42,0	22,5	23,0	1AB050-051	710	118	105	207	M10	KZ 34
33,1	42,0	31,7	32,8	1AB050-064	1200	118	160	272	M10	KZ 52
33,1	42,0	36,1	37,1	1AB050-079	1350	118	170	272	M10	KZ 58
33,1	42,0	39,3	40,5	1AB050-080	1400	118	170	272	M10	KZ 62
42,1	52,0	37,2	38,6	1AB050-100	1400	136	167	280	M10	KZ 60
42,1	52,0	39,3	40,5	1AB050-104	1600	136	170	283	M10	KZ 62

AL-T-Connector

Conductor-Tube

Dim. of Conductor			Code	Technical Data of Connector						
ØA		ØB		Max. Current	Dim. of Connector				Bolt Dim.	
Min.	Max.				D	E	C	F	ØA	ØB
52,1	63,0	63,0	1AB010-268	2200	90	96	213	160	M10	M10
52,1	63,0	80,0	1AB010-246	2200	90	87	207	154	M10	M12
52,1	63,0	100,0	1AB010-274	2000	90	93	215	163	M10	M12
52,1	63,0	1,5“	1AB010-260	1800	90	95	209	156	M10	M10
52,1	63,0	2“	1AB010-268	2200	90	96	213	160	M10	M10
52,1	63,0	2,5“	1AB010-246	2200	90	87	207	154	M10	M12
52,1	63,0	3,5“	1AB010-274	2000	90	93	215	163	M10	M12

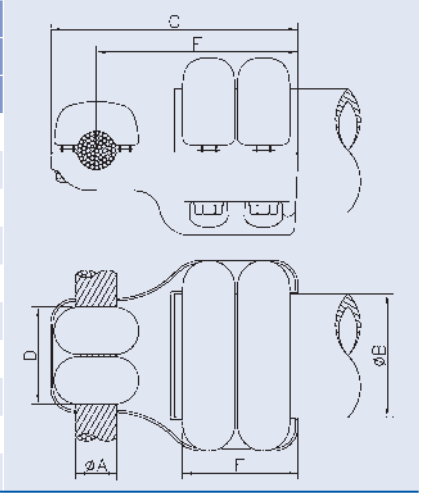

16,1	24,0	100,0	1AB010-061	1000	106	93	181	147	M10	M12
33,1	42,0	63,0	1AB010-192	2000	118	96	185	144	M10	M10
33,1	42,0	80,0	1AB010-206	2000	118	87	182	140	M10	M12
33,1	42,0	120,0	1AB010-204	2000	118	87	191	149	M10	M12
33,1	42,0	125,0	1AB010-204	2000	118	87	191	149	M10	M12
16,1	24,0	3,5“	1AB010-061	1000	106	93	181	147	M10	M12
33,1	42,0	2“	1AB010-192	2000	118	96	185	144	M10	M10
33,1	42,0	2,5“	1AB010-206	2000	118	87	182	140	M10	M12
33,1	42,0	4“	1AB010-204	2000	118	87	191	149	M10	M12

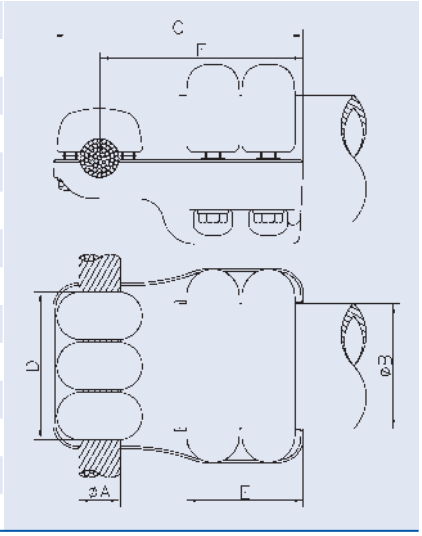

AL-T-Connector

Tube-Conductor

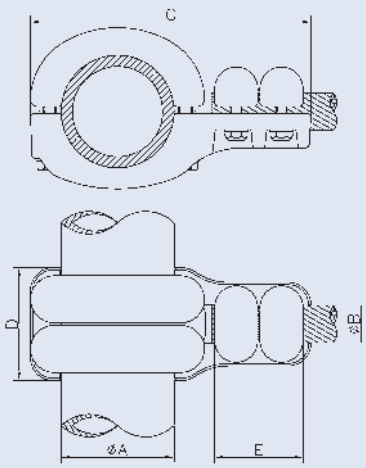

Dim. of Conductor			Code	Technical Data of Connector					
ØA	ØB			Max. Current	Dim. of Connector			Bolt Dim.	
	Min.	Max.			D	E	C	ØA	ØB
63,0	16,1	24,0	1AB010-250	1000	102	70	190	M10	M10
63,0	24,1	33,0	1AB010-264	1250	102	78	198	M10	M10
63,0	42,1	52,0	1AB010-260	1800	102	90	209	M10	M10
63,0	52,1	63,0	1AB010-268	2200	102	90	209	M10	M10
80,0	16,1	24,0	1AB010-278	1000	96	70	221	M12	M10
80,0	24,1	33,0	1AB010-286	1250	96	78	229	M12	M10
80,0	33,1	42,0	1AB010-284	1400	96	78	233	M12	M10
80,0	42,1	52,0	1AB010-300	1700	96	90	241	M12	M10
80,0	52,1	63,0	1AB010-308	2200	96	90	254	M12	M10
100,0	16,1	24,0	1AB010-316	1000	98	70	238	M12	M10
100,0	33,1	42,0	1AB010-326	1400	98	78	247	M12	M10
100,0	52,1	63,0	1AB010-338	2200	98	90	257	M12	M10
120,0	16,1	24,0	1AB010-348	1000	96	70	266	M12	M10
120,0	24,1	33,0	1AB010-354	1250	96	78	276	M12	M10
120,0	33,1	42,0	1AB010-356	1400	96	78	276	M12	M10
120,0	42,1	52,0	1AB010-360	1800	96	90	281	M12	M10
140,0	16,1	24,0	1AB010-384	1000	102	70	306	M12	M10
150,0	16,1	24,0	1AB010-384	1000	102	70	306	M12	M10
160,0	16,1	24,0	1AB010-384	1000	102	70	306	M12	M10

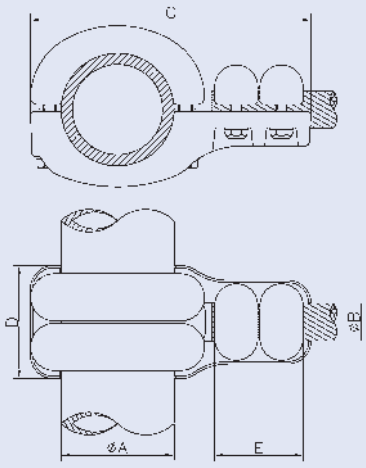

1,5“	24,1	33,0	1AB010-230	1250	100	78	186	M10	M10
1,5“	33,1	42,0	1AB010-228	1400	100	78	187	M10	M10
1,5“	42,1	52,0	1AB010-244	1700	100	90	198	M10	M10
2“	16,1	24,0	1AB010-250	1000	102	70	190	M10	M10
2“	24,1	33,0	1AB010-264	1250	102	78	198	M10	M10
2“	42,1	52,0	1AB010-260	1800	102	90	209	M10	M10
2“	52,1	63,0	1AB010-268	2200	102	90	209	M10	M10
2,5“	16,1	24,0	1AB010-278	1000	96	70	221	M12	M10
2,5“	24,1	33,0	1AB010-286	1250	96	78	229	M12	M10
2,5“	33,1	42,0	1AB010-284	1400	96	78	233	M12	M10
2,5“	42,1	52,0	1AB010-300	1700	96	90	241	M12	M10
2,5“	52,1	63,0	1AB010-308	2200	96	90	254	M12	M10
3“	16,1	24,0	1AB010-294	1000	96	70	228	M12	M10
3“	33,1	42,0	1AB010-305	1400	96	78	241	M12	M10
3“	52,1	63,0	1AB010-334	2200	96	90	255	M12	M10
3,5“	16,1	24,0	1AB010-316	1000	98	70	238	M12	M10
3,5“	33,1	42,0	1AB010-326	1400	98	78	247	M12	M10

AL-T-Connector

Tube-Conductor

Dim. of Conductor			Code	Technical Data of Connector					
ØA	ØB			Max. Current	Dim. of Connector			Bolt Dim.	
	Min.	Max.			D	E	C	ØA	ØB
3,5“	52,1	63,0	1AB010-338	2200	98	90	257	M12	M10
4“	16,1	24,0	1AB010-348	1000	96	70	266	M12	M10
4“	24,1	33,0	1AB010-354	1250	96	78	276	M12	M10
4“	33,1	42,0	1AB010-356	1400	96	78	276	M12	M10
4“	42,1	52,0	1AB010-360	1800	96	90	281	M12	M10
4,5“	16,1	24,0	1AB010-348	1000	96	70	266	M12	M10
4,5“	24,1	33,0	1AB010-354	1250	96	78	276	M12	M10
4,5“	33,1	42,0	1AB010-356	1400	96	78	276	M12	M10
4,5“	42,1	52,0	1AB010-360	1800	96	90	281	M12	M10
5“	16,1	24,0	1AB010-360	1800	96	90	281	M12	M10

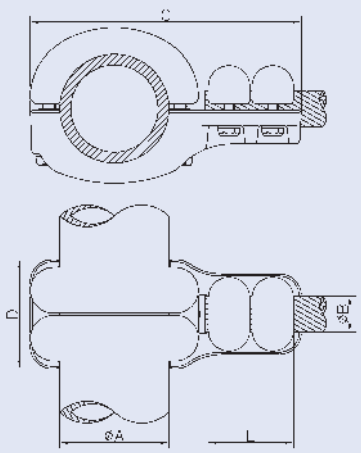

AL-T-Connector

Tube-Conductor

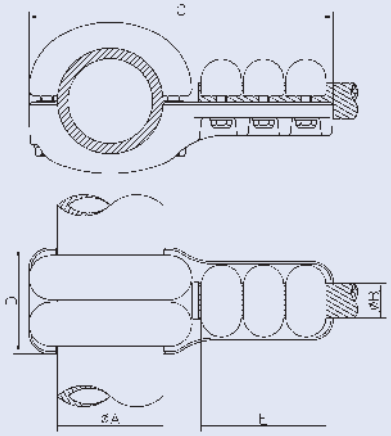

Dim. of Conductor			Code	Technical Data of Connector					
ØA	ØB			Max. Current	Dim. of Connector			Bolt Dim.	
	Min.	Max.			D	E	C	ØA	ØB
63,0	24,1	33,0	1AB010-266	1400	98	118	238	M10	M10
63,0	33,1	42,0	1AB010-256	1600	102	118	255	M10	M10
80,0	16,1	24,0	1AB010-276	1000	96	106	257	M12	M10
80,0	24,1	33,0	1AB010-282	1600	96	118	269	M12	M10
80,0	33,1	42,0	1AB010-288	1600	96	118	271	M12	M10
80,0	42,1	44,0	1AB010-333	1600	96	118	279	M12	M10
100,0	16,1	24,0	1AB010-318	800	98	106	274	M12	M10
100,0	24,1	33,0	1AB010-320	1400	98	118	288	M12	M10
100,0	33,1	42,0	1AB010-328	1800	98	118	287	M12	M10
100,0	42,1	44,0	1AB010-336	1600	100	118	288	M12	M10
100,0	52,1	63,0	1AB010-340	2600	98	142	304	M12	M10
120,0	24,1	33,0	1AB010-352	1600	96	118	316	M12	M10
120,0	33,1	42,0	1AB010-358	1600	96	118	316	M12	M10
140,0	16,1	24,0	1AB010-386	1600	102	118	358	M12	M10
150,0	16,1	24,0	1AB010-386	1600	102	118	358	M12	M10
160,0	16,1	24,0	1AB010-386	1600	102	118	358	M12	M10

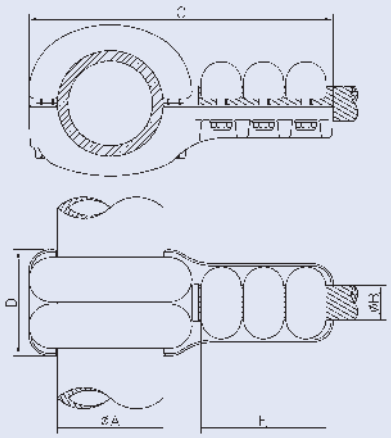

1,5“	24,1	33,0	1AB010-220	1400	100	118	237	M10	M10
2“	24,1	33,0	1AB010-266	1400	98	118	238	M10	M10
2“	33,1	42,0	1AB010-256	1600	102	118	255	M10	M10
2,5“	16,1	24,0	1AB010-276	1000	96	106	257	M12	M10
2,5“	24,1	33,0	1AB010-282	1600	96	118	269	M12	M10
2,5“	33,1	42,0	1AB010-288	1600	96	118	271	M12	M10
2,5“	42,1	44,0	1AB010-333	1600	96	118	279	M12	M10
3“	24,1	33,0	1AB010-296	1400	96	118	283	M12	M10
3,5“	16,1	24,0	1AB010-318	800	98	106	274	M12	M10
3,5“	24,1	33,0	1AB010-320	1400	98	118	288	M12	M10
3,5“	33,1	42,0	1AB010-328	1800	98	118	287	M12	M10
3,5“	42,1	44,0	1AB010-336	1600	100	118	288	M12	M10
3,5“	52,1	63,0	1AB010-340	2600	98	142	304	M12	M10
4“	24,1	33,0	1AB010-352	1600	96	118	316	M12	M10
4“	33,1	42,0	1AB010-358	1600	96	118	316	M12	M10
4,5“	24,1	33,0	1AB010-352	1600	96	118	316	M12	M10
4,5“	33,1	42,0	1AB010-358	1600	96	118	316	M12	M10
5“	16,1	24,0	1AB010-386	1600	102	118	358	M12	M10

AL-T-Connector

Tube-Tube

Dim. of Conductor		Code	Technical Data of Connector						
			Max. Current	Dim. of Connector				Bolt Dim.	
ØA	ØB			D	E	C	F	ØA	ØB
63,0	63,0	1AB010-268	2200	98	96	213	160	M10	M10
63,0	80,0	1AB010-246	2200	102	87	207	154	M10	M12
63,0	100,0	1AB010-274	2000	102	93	215	163	M10	M12
80,0	63,0	1AB010-308	2200	96	96	254	185	M12	M10
80,0	80,0	1AB010-312	2400	90	90	241	173	M12	M12
80,0	120,0	1AB010-315	3200	100	88	274	205	M12	M12
100,0	63,0	1AB010-338	2200	98	96	180	257	M12	M10
100,0	100,0	1AB010-344	2600	98	93	183	260	M12	M12
120,0	80,0	1AB010-368	2400	96	87	182	273	M12	M12
120,0	120,0	1AB010-366	3000	94	87	192	280	M12	M12
140,0	80,0	1AB010-391	2400	102	87	215	325	M12	M12
150,0	80,0	1AB010-391	2400	102	87	215	325	M12	M12
160,0	80,0	1AB010-391	2400	102	87	215	325	M12	M12

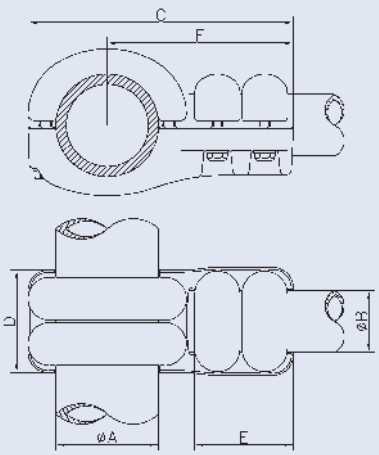

1,5“	1,5“	1AB010-244	1700	100	95	150	198	M10	M10
2“	1,5“	1AB010-260	1800	102	95	156	209	M10	M10
2“	2“	1AB010-246	2200	102	87	207	154	M10	M12
2“	2,5“	1AB010-268	2200	98	96	213	160	M10	M10
2“	3,5“	1AB010-274	2000	102	93	215	163	M10	M12
2,5“	1,5“	1AB010-300	1700	96	85	173	241	M12	M10
2,5“	2“	1AB010-308	2200	96	96	254	185	M12	M10
2,5“	2,5“	1AB010-312	2400	90	90	241	173	M12	M12
2,5“	4“	1AB010-315	3200	100	88	274	205	M12	M12
2,5“	4,5“	1AB010-315	3200	100	88	274	205	M12	M12
3“	2“	1AB010-334	2200	96	95	182	255	M12	M10
3,5“	2“	1AB010-338	2200	98	96	180	257	M12	M10
3,5“	3,5“	1AB010-344	2600	98	93	183	260	M12	M12
4“	1,5“	1AB010-360	1800	96	95	191	281	M12	M10
4“	2,5“	1AB010-368	2400	96	87	182	273	M12	M12
4“	4“	1AB010-366	3000	94	87	192	280	M12	M12
4“	4,5“	1AB010-366	3000	94	87	192	280	M12	M12
4,5“	1,5“	1AB010-360	1800	96	95	191	281	M12	M10
4,5“	2,5“	1AB010-368	2400	96	87	182	273	M12	M12
4,5“	4“	1AB010-366	3000	94	87	192	280	M12	M12
4,5“	4,5“	1AB010-366	3000	94	87	192	280	M12	M12
5“	2,5“	1AB010-391	2400	102	87	215	325	M12	M12

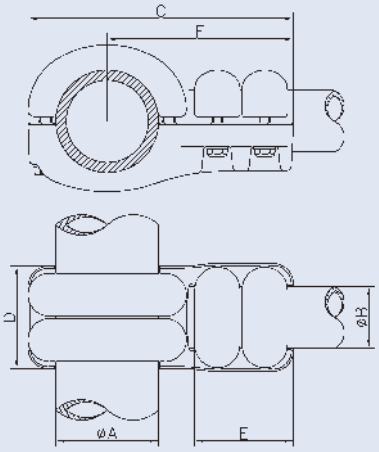

AL-T-Terminal

Conductor-Stud

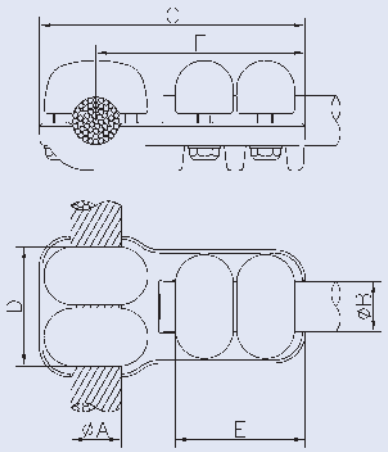

Dim. of Conductor			Code	Technical Data of Connector						
ØA		ØB		Max. Current	Dim. of Connector				Bolt Dim.	
Min.	Max.				D	E	C	F	ØA	ØB
5,0	16,0	30,0	1AB010-006	450	62	78	137	112	M8	M10
16,1	24,0	30,0	1BB010-020	1000	70	74	144	112	M10	M10
16,1	24,0	40,0	1AB010-046	1000	70	85	166	132	M10	M10
24,1	33,0	30,0	1BB010-036	1200	78	70	144	108	M10	M10
24,1	33,0	40,0	1AB010-092	1250	78	85	172	135	M10	M10
33,1	42,0	30,0	1BB010-046	1000	70	85	166	132	M10	M10
33,1	42,0	40,0	1AB010-162	1400	78	85	182	140	M10	M10
42,1	52,0	30,0	1BB010-052	1200	90	70	164	118	M10	M10
42,1	52,0	40,0	1AB010-228	1400	90	85	187	140	M10	M10
42,1	52,0	50,0	1AB010-244	1700	90	95	198	150	M10	M10
52,1	63,0	30,0	1AB010-264	1200	90	85	198	145	M10	M10
52,1	63,0	40,0	1AB010-260	1800	90	95	209	156	M10	M10
52,1	63,0	50,0	1AB010-260	1800	90	95	209	156	M10	M10
52,1	63,0	60,0	1AB010-268	2200	90	96	160	213	M10	M10

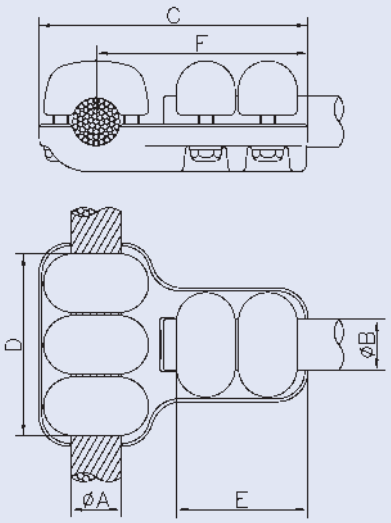

16,1	24,0	30,0	1BB010-022	1000	106	78	136	104	M10	M10
16,1	24,0	40,0	1AB010-048	1000	106	85	165	131	M10	M10
24,1	25,9	30,0	1BB010-044	1200	118	80	157	120	M10	M10
24,1	25,9	40,0	1AB010-096	1400	118	78	166	130	M10	M10
24,1	25,9	50,0	1AB010-110	1600	118	95	177	140	M10	M10
24,1	25,9	60,0	1AB010-112	1600	118	96	180	143	M10	M10
26,0	33,0	30,0	1BB010-043	1200	118	74	151	115	M10	M10
26,0	33,0	40,0	1AB010-096	1400	118	78	166	130	M10	M10
26,0	33,0	50,0	1AB010-110	1600	118	95	177	140	M10	M10
26,0	33,0	60,0	1AB010-112	1600	118	96	180	143	M10	M10
33,1	42,0	40,0	1BB010-048	1000	106	85	165	131	M10	M10
33,1	42,0	50,0	1AB010-192	2000	118	90	185	144	M10	M10
33,1	42,0	60,0	1AB010-192	2000	118	90	185	144	M10	M10
42,1	52,0	30,0	1BB010-054	1400	136	78	177	131	M10	M10
42,1	52,0	40,0	1BB010-054	1400	136	78	177	131	M10	M10
42,1	52,0	50,0	1BB010-058	2200	136	96	208	160	M10	M10
42,1	52,0	60,0	1BB010-058	2200	136	96	208	160	M10	M10
52,1	63,0	30,0	1BB010-061	1400	136	85	208	155	M10	M10
52,1	63,0	40,0	1BB010-061	1400	136	85	208	155	M10	M10

AL-T-Terminal

Conductor-Stud

Dim. of Conductor			Code	Technical Data of Connector						
ØA		ØB		Max. Current	Dim. of Connector				Bolt Dim.	
Min.	Max.				D	E	C	F	ØA	ØB
16,1	24,0	30,0	1AB010-044	1000	106	125	204	170	M10	M10
16,1	24,0	40,0	1AB010-052	1000	106	125	206	172	M10	M10
24,1	33,0	30,0	1AB010-122	1400	118	125	210	173	M10	M10
24,1	33,0	40,0	1AB010-102	1400	118	125	217	180	M10	M10
24,1	33,0	50,0	1AB010-116	2000	118	136	224	188	M10	M10
24,1	33,0	60,0	1AB010-116	2000	118	136	224	188	M10	M10
33,1	42,0	30,0	1AB010-158	1400	118	125	223	181	M10	M10
33,1	42,0	40,0	1AB010-174	1600	118	125	219	180	M10	M10
33,1	42,0	50,0	1AB010-196	2000	118	136	231	190	M10	M10
33,1	42,0	60,0	1AB010-196	2000	118	136	231	190	M10	M10
42,1	52,0	30,0	1AB010-224	1400	136	125	231	184	M10	M10
42,1	52,0	40,0	1AB010-232	2000	136	125	233	185	M10	M10
42,1	52,0	50,0	1AB010-236	2300	136	136	238	192	M10	M10

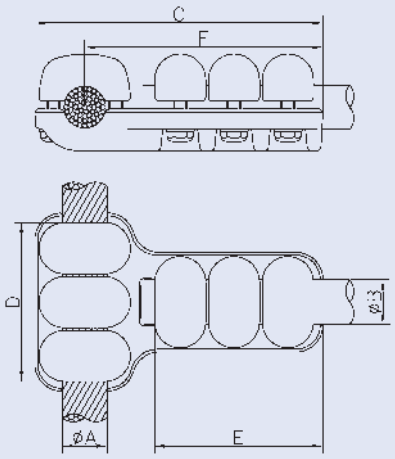

AL-T-Terminal

Stud-Conductor

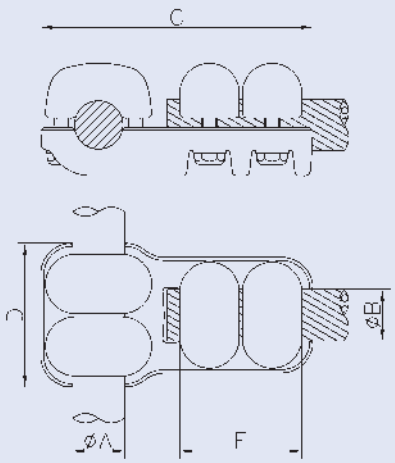

Dim. of Conductor			Code	Technical Data of Connector					
ØA	ØB			Max. Current	Dim. of Connector			Bolt Dim.	
	Min.	Max.			D	E	C	ØA	ØB
30,0	5,0	16,0	1AB010-062	450	78	62	140	M10	M8
30,0	16,1	24,0	1AB010-068	1000	92	70	158	M10	M10
30,0	24,1	33,0	1BB010-036	1200	78	70	144	M10	M10
30,0	33,1	42,0	1AB010-092	1250	92	78	172	M10	M10
40,0	16,1	24,0	1AB010-138	1000	92	70	168	M10	M10
40,0	24,1	33,0	1BB010-046	1200	78	70	154	M10	M10
40,0	33,1	42,0	1AB010-162	1400	92	78	182	M10	M10
40,0	42,1	52,0	1AB010-244	1700	90	95	198	M10	M10
40,0	52,1	63,0	1BB010-056	1700	90	90	184	M10	M10
50,0	24,1	33,0	1BB010-052	1200	90	70	164	M10	M10
50,0	33,1	42,0	1AB010-228	1400	90	85	187	M10	M10
50,0	42,1	52,0	1AB010-244	1700	90	95	198	M10	M10
50,0	52,1	63,0	1BB010-056	1700	90	90	184	M10	M10
60,0	16,1	24,0	1AB010-250	1000	102	70	190	M10	M10
60,0	24,1	33,0	1AB010-264	1250	102	78	198	M10	M10
60,0	42,1	52,0	1AB010-260	1800	102	90	209	M10	M10
60,0	52,1	63,0	1AB010-268	2200	98	90	213	M10	M10

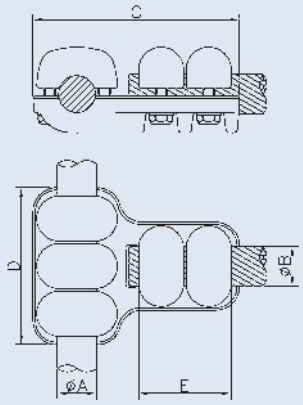

30,0	16,1	24,0	1BB010-034	1000	132	70	155	M10	M10
30,0	24,1	25,9	1BB010-044	1200	132	70	157	M10	M10
30,0	26,0	33,0	1BB010-043	1200	118	72	151	M10	M10
30,0	33,1	42,0	1AB010-096	1400	118	78	166	M10	M10
30,0	42,1	52,0	1AB010-110	1600	132	90	177	M10	M10
30,0	52,1	63,0	1AB010-112	1600	132	90	180	M10	M10
40,0	33,1	42,0	1BB010-048	1400	132	78	180	M10	M10
40,0	52,1	63,0	1AB010-192	2000	118	90	185	M10	M10
50,0	33,1	42,0	1BB010-054	1400	136	78	177	M10	M10
50,0	52,1	63,0	1BB010-058	2200	146	90	208	M10	M10
60,0	33,1	42,0	1BB010-061	1400	148	78	208	M10	M10

AL-T-Terminal

Stud-Conductor

Dim. of Conductor			Code	Technical Data of Connector					
ØA	ØB			Max. Current	Dim. of Connector			Bolt Dim.	
	Min.	Max.			D	E	C	ØA	ØB
30,0	16,1	24,0	1AB010-074	800	118	106	185	M10	M10
30,0	24,1	25,4	1AB010-122	1400	132	118	210	M10	M10
30,0	25,5	31,4	1AB010-125	1400	118	118	203	M10	M10
30,0	31,5	33,0	1AB010-126	1400	118	118	203	M10	M10
30,0	33,1	42,0	1AB010-102	1400	132	118	217	M10	M10
30,0	42,1	44,0	1AB010-106	1400	132	118	217	M10	M10
30,0	52,1	63,0	1AB010-116	2000	118	136	224	M10	M10
40,0	16,1	24,0	1AB010-144	1000	120	106	204	M10	M10
40,0	24,1	33,0	1BB010-050	1400	118	106	194	M10	M10
40,0	33,1	42,0	1AB010-174	1600	132	118	219	M10	M10
40,0	52,1	63,0	1AB010-196	2000	118	136	231	M10	M10
50,0	24,1	33,0	1AB010-224	1400	146	118	231	M10	M10
50,0	33,1	42,0	1AB010-232	2000	146	118	233	M10	M10
50,0	42,1	52,0	1AB010-236	2300	136	136	238	M10	M10

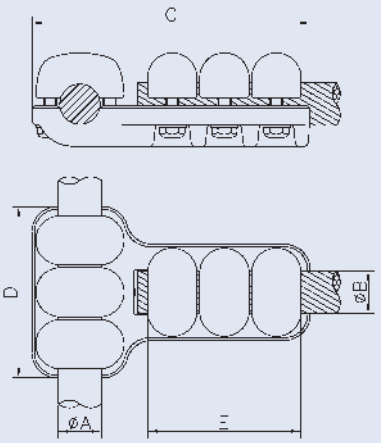

AL-T-Flat Terminal

Conductor-Flat Terminal

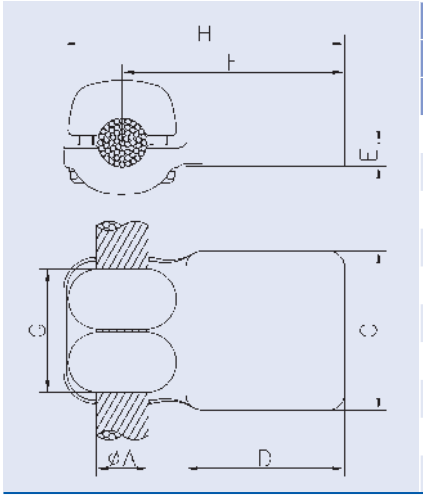

Dimension of Conductor				Code	Technical Data of Connector					
ØA		C	D		Max. Current	Dim. of Connector				Bolt Dim.
Min.	Max.					E	F	G	H	ØA
5,0	16,0	75	75	1CB010-015	450	10	105	62	131	M8
5,0	16,0	100	100	1CB010-034	450	8	135	62	161	M8
16,1	24,0	40	40	1CB010-072	700	15	76	70	110	M10
16,1	24,0	75	75	1CB010-080	1000	15	111	70	145	M10
24,1	33,0	60	60	1CB010-100	1250	15	102	78	140	M10
24,1	33,0	80	80	1CB010-088	1250	12	120	78	157	M10
24,1	33,0	100	100	1CB010-096	1250	15	140	78	177	M10
42,1	52,0	100	100	1CB010-208	1700	20	150	90	197	M10
52,1	63,0	80	80	1CB010-213	2000	20	136	90	189	M10
52,1	63,0	100	100	1CB010-212	2000	20	156	90	209	M10

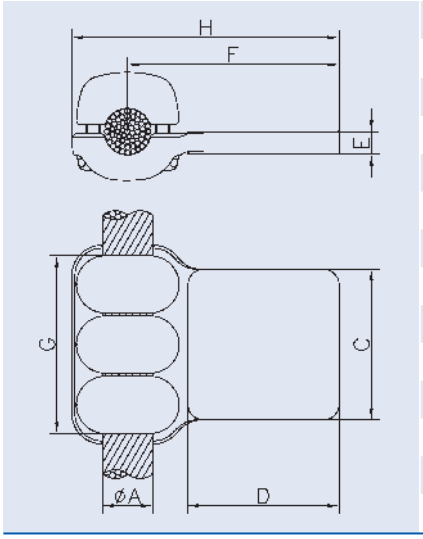

16,1	24,0	100	100	1CB010-068	800	10	137	106	169	M10
24,1	33,0	80	80	1CB010-112	1250	12	125	118	162	M10
24,1	33,0	100	100	1CB010-128	1400	15	140	118	177	M10
33,1	42,0	60	60	1CB010-156	1600	20	105	118	147	M10
33,1	42,0	75	75	1CB010-160	1600	15	120	118	162	M10
33,1	42,0	80	80	1CB010-164	1600	15	125	118	167	M10
33,1	42,0	100	100	1CB010-176	1600	15	145	118	187	M10
33,1	42,0	200	100	1CB010-186	1600	15	145	118	187	M10

AL-T-Flat Terminal

Tube-Flat Terminal

Dim. of Conductor			Code	Technical Data of Connector					
				Max. Current	Dim. of Connector				Bolt Dim.
ØA	C	D			E	F	G	H	ØA
63,0	80	80	1CB010-213	2000	20	136	102	189	M10
63,0	100	100	1CB010-212	2000	20	156	102	209	M10
80,0	60	60	1CB010-228	1400	20	143	96	212	M12
80,0	80	80	1CB010-236	2000	20	136	96	232	M12
80,0	100	100	1CB010-240	2000	20	183	96	222	M12
80,0	125	125	1CB010-225	2000	16	204	96	273	M12
120,0	75	75	1CB010-278	2500	30	173	96	263	M12
120,0	100	100	1CB010-280	2500	25	198	96	288	M12
120,0	125	125	1CB010-281	2000	16	224	96	314	M12

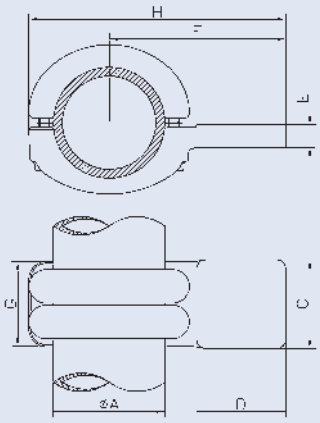

1,5“	100	100	1CB010-208	1700	20	150	100	197	M10
2“	80	80	1CB010-213	2000	20	136	102	189	M10
2“	100	100	1CB010-212	2000	20	156	102	209	M10
2,5“	60	60	1CB010-228	1400	20	143	96	212	M12
2,5“	80	80	1CB010-236	2000	20	136	96	232	M12
2,5“	100	100	1CB010-240	2000	20	183	96	222	M12
2,5“	125	125	1CB010-225	2000	16	204	96	273	M12
3“	100	100	1CB010-253	2500	25	182	96	255	M12
4“	75	75	1CB010-278	2500	30	173	96	263	M12
4“	100	100	1CB010-280	2500	25	198	96	288	M12
4“	125	125	1CB010-281	2000	16	224	96	314	M12
4,5“	75	75	1CB010-278	2500	30	173	96	263	M12
4,5“	100	100	1CB010-280	2500	25	198	96	288	M12
4,5“	125	125	1CB010-281	2000	16	224	96	314	M12

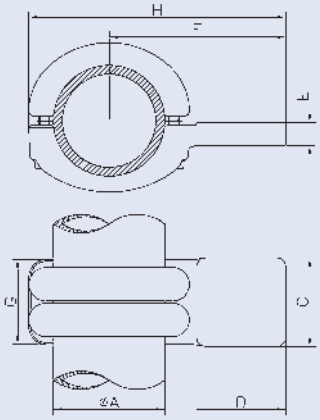

AL-Welded-Flat Terminal

Tube-Flat Terminal

Figur 1

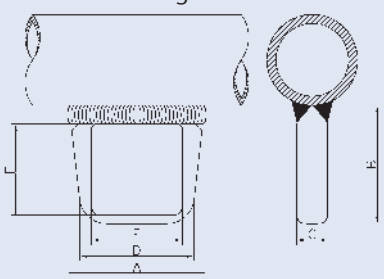

Dimension of Conductor				Code	Technical Data of Connector			
					Max. Current	Dim. Flat Terminal		
A	B	C	D			Figur	E	F
60	60	15		1CB082-005	300	1	60	60
100	110	15		1CB082-007	1250	1	100	100
220	130	25	100	1CB082-015	3620	1	100	100
145	130	35	120	1CB082-013	3620	1	100	100
190	130	20	110	1CB082-010	2200	1	100	100
199	130	20	104	1CB082-012	2200	1	100	100
300	130	30	210	1CB082-021	7200	1	200	100
380	127	45	300	1CB082-022	9000	1	300	100
400	130	20	210	1CB082-020	4920	1	200	100

AL-T-Suspension-Connector

Conductor-Conductor

Dim. of Conductor				Code	Technical Data of Connector								
ØA		ØB			Max. Curr.	Dim. Connector			Bolt Dim.		Suspension		
Min.	Max.	Min.	Max.			D	E	C	ØA	ØB	Bolt Dim.	Fig.	F
16,1	24,0	16,1	24,0	1SB100-020	800	70	70	107	2/M10	2/M10	Ø19	1	
16,1	24,0	16,1	24,0	1SB100-022	800	70	70	107	2/M10	2/M10	Ø22	1	
24,1	33,0	24,1	33,0	1SB100-045	1600	118	118	84	3/M10	3/M10	Ø19	1	
24,1	33,0	24,1	33,0	1SB100-046	1600	118	118	84	3/M10	3/M10	Ø22	1	
24,1	33,0	42,1	44,0	1SB100-047	1400	118	118	90	3/M10	3/M10	Ø19	1	
24,1	33,0	42,1	44,0	1SB100-044	1400	118	118	90	3/M10	3/M10	Ø19	2	19
33,1	42,0	33,1	42,0	1SB100-041	1600	118	118	92	3/M10	3/M10	Ø19	1	
33,1	42,0	33,1	42,0	1SB100-042	1600	118	118	92	3/M10	3/M10	Ø22	1	

Figur 1

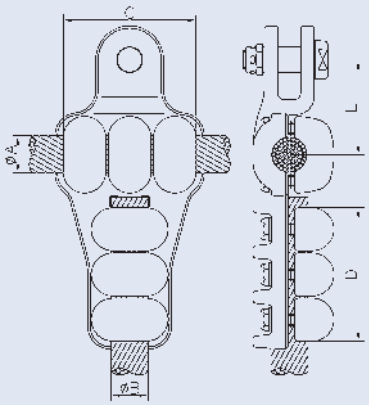

Figur 2

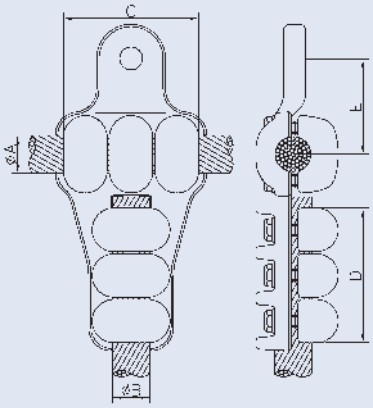

AL-90°-Connector

Tube-Conductor

Dim. of Conductor			Code	Technical Data of Connector						
ØA	ØB			Max. Current	Dim. of Connector				Bolt Dim.	
	Min.	Max.			C	D	E	F	ØA	ØB
63,0	33,1	42,0	1BD010-154	1400	96	78	125	124	M10	M10
63,0	52,0	63,0	1BD010-156	2200	96	90	138	138	M10	M10
1,5“	24,1	33,0	1BD010-130	1200	95	78	118	97	M10	M10
1,5“	33,1	42,0	1BD010-134	1400	97	78	126	127	M10	M10
2“	33,1	42,0	1BD010-154	1400	96	78	125	124	M10	M10
2“	52,0	63,0	1BD010-156	2200	96	90	138	138	M10	M10

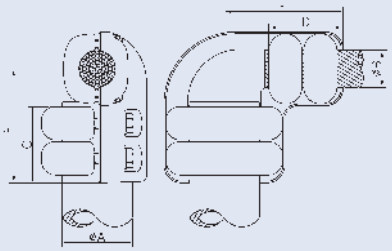

63,0	33,1	42,0	1BD010-104	1600	96	118	138	168	M10	M10
80,0	33,1	42,0	1BD010-165	1600	87	118	130	175	M12	M10
1,5“	24,1	33,0	1BD010-048	1400	95	118	130	160	M10	M10
1,5“	33,1	42,0	1BD010-136	1600	97	118	127	167	M10	M10
2“	33,1	42,0	1BD010-104	1600	96	118	138	168	M10	M10
2,5“	33,1	42,0	1BD010-165	1600	87	118	130	175	M12	M10

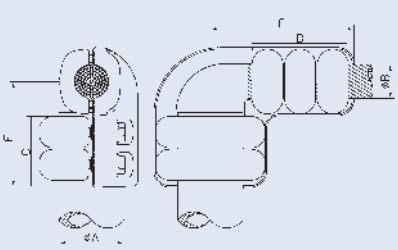

AL-90°-Terminal

Conductor-Stud

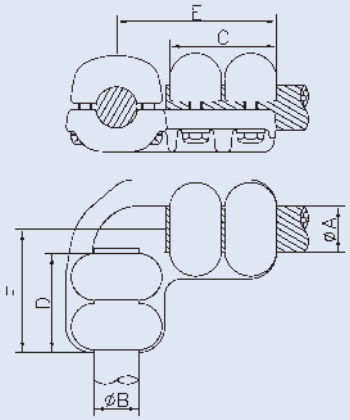

Dim. of Conductor			Code	Technical Data of Connector						
ØA		ØB		Max. Current	Dim. of Connector				Bolt Dim.	
Min.	Max.				C	D	E	F	ØA	ØB
5,0	16,0	30,0	1BD010-010	450	62	72	94	80	M8	M10
5,0	16,0	40,0	1BD010-011	450	62	85	90	115	M8	M10
16,1	24,0	30,0	1BD010-016	1000	70	85	94	110	M10	M10
16,1	24,0	40,0	1BD010-081	1000	70	85	110	120	M10	M10
24,1	25,1	30,0	1BD010-050	1200	78	72	86	114	M10	M10
24,1	25,1	40,0	1BD010-080	1250	78	85	118	118	M10	M10
24,1	25,1	50,0	1BD010-130	1200	78	92	97	122	M10	M10
25,2	33,0	30,0	1BD010-051	1200	73	75	113	89	M10	M10
25,2	33,0	40,0	1BD010-050	1200	78	72	86	114	M10	M10
25,2	33,0	50,0	1BD010-130	1200	78	92	97	122	M10	M10
33,1	42,0	30,0	1BD010-080	1250	78	85	118	118	M10	M10
33,1	42,0	40,0	1BD010-134	1400	78	97	127	126	M10	M10
33,1	42,0	50,0	1BD010-134	1400	78	97	127	126	M10	M10
33,1	42,0	60,0	1BD010-154	1400	78	97	124	125	M10	M10
42,1	52,0	30,0	1BD010-130	1200	90	85	97	122	M10	M10
42,1	52,0	40,0	1BD010-134	1400	90	85	127	126	M10	M10
52,1	63,0	30,0	1BD010-154	1400	90	85	124	125	M10	M10
52,1	63,0	40,0	1BD010-154	1400	90	85	124	125	M10	M10
52,1	63,0	50,0	1BD010-156	2200	90	96	138	138	M10	M10
52,1	63,0	60,0	1BD010-156	2200	90	96	138	138	M10	M10

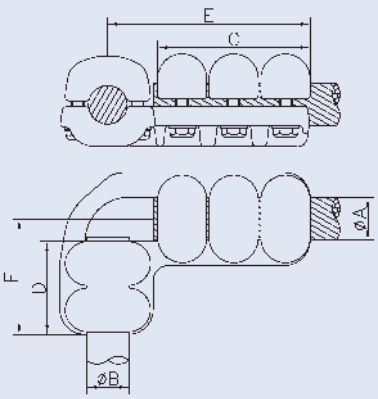

16,1	24,0	30,0	1BD010-038	1000	106	85	130	110	M10	M10
24,1	31,4	30,0	1BD010-052	1250	118	85	157	100	M10	M10
24,1	31,4	40,0	1BD010-060	1400	118	85	165	115	M10	M10
24,1	31,4	50,0	1BD010-048	1400	118	95	160	130	M10	M10
31,5	33,0	30,0	1BD010-062	1250	118	85	156	89	M10	M10
31,5	33,0	40,0	1BD010-060	1400	118	85	165	115	M10	M10
31,5	33,0	50,0	1BD010-048	1400	118	95	160	130	M10	M10
33,1	42,0	30,0	1BD010-072	1200	118	70	149	97	M10	M10
33,1	42,0	40,0	1BD010-106	1400	118	85	167	110	M10	M10
33,1	42,0	50,0	1BD010-136	1600	118	97	167	127	M10	M10
33,1	42,0	60,0	1BD010-104	1600	118	97	167	138	M10	M10

AL-90°-Terminal

Conductor-Stud

Dim. of Conductor			Code	Technical Data of Connector						
ØA		ØB		Max. Current	Dim. of Connector				Bolt Dim.	
Min.	Max.				C	D	E	F	ØA	ØB
24,1	33,0	30,0	1BD010-046	1400	118	125	162	132	M10	M10
24,1	33,0	40,0	1BD010-114	1600	118	139	160	170	M10	M10
33,1	42,0	30,0	1BD010-114	1600	136	118	170	160	M10	M10
33,1	42,0	40,0	1BD010-108	1600	118	125	167	150	M10	M10

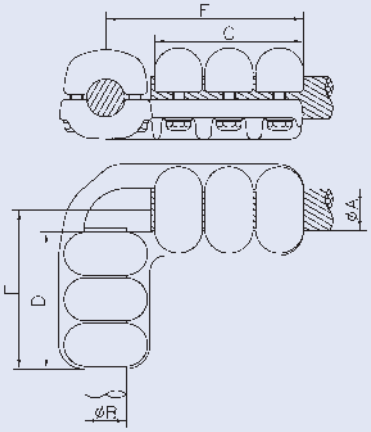

AL-90°-Terminal

Stud-Conductor

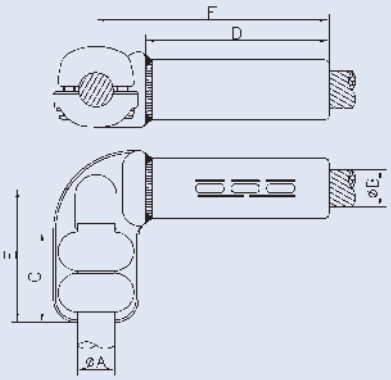

Dim. of Conductor			Code	Technical Data of Connector						
ØA	ØB			Max. Current	Dim. of Connector				Bolt Dim. ØA	Inst. Die No.
	Min.	Max.			C	D	E	F		
30,0	15,4	16,5	1BD050-019	400	78	105	117	148	M10	KZ 28
30,0	20,7	21,2	1BD050-027	650	78	105	117	148	M10	KZ 32
30,0	23,2	23,6	1BD050-028	750	78	105	117	148	M10	KZ 38
30,0	26,1	26,9	1BD050-025	900	78	105	117	148	M10	KZ 42
30,0	27,5	28,4	1BD050-031	950	78	150	117	193	M10	KZ 42
30,0	26,0	29,9	1BD050-030	1000	78	160	117	203	M10	KZ 46
30,0	31,7	32,8	1BD050-040	1200	78	160	117	203	M10	KZ 52
30,0	32,9	33,9	1BD050-044	1200	78	160	117	203	M10	KZ 52
30,0	37,2	38,6	1BD050-029	1350	78	170	117	213	M10	KZ 60
30,0	45,6	47,0	1BD050-050	1600	100	210	103	280	M10	KZ 70
40,0	31,7	32,8	1BD050-034	1200	100	160	122	218	M10	KZ 52
40,0	36,1	37,1	1BD050-033	1340	100	170	122	228	M10	KZ 58
40,0	45,6	47,0	1BD050-050	1600	100	210	103	280	M10	KZ 70
50,0	31,7	32,8	1BD050-034	1200	100	160	122	218	M10	KZ 52
50,0	36,1	37,1	1BD050-033	1340	100	170	122	228	M10	KZ 58

AL-90°-Terminal

Tube-Stud

Dim. of Conductor		Code	Technical Data of Connector						
ØA	ØB		Max. Current	Dim. of Connector				Bolt Dim.	
				C	D	E	F	ØA	ØB
63,0	30,0	1BD010-154	1400	96	78	125	124	M10	M10
63,0	40,0	1BD010-154	1400	96	78	125	124	M10	M10
63,0	50,0	1BD010-156	2200	96	90	138	138	M10	M10
63,0	60,0	1BD010-156	2200	96	90	138	138	M10	M10
1,5“	30,0	1BD010-130	1200	95	78	118	97	M10	M10
1,5“	40,0	1BD010-134	1400	97	78	126	127	M10	M10
2“	30,0	1BD010-154	1400	96	78	125	124	M10	M10
2“	40,0	1BD010-154	1400	96	78	125	124	M10	M10
2“	50,0	1BD010-156	2200	96	90	138	138	M10	M10
2“	60,0	1BD010-156	2200	96	90	138	138	M10	M10

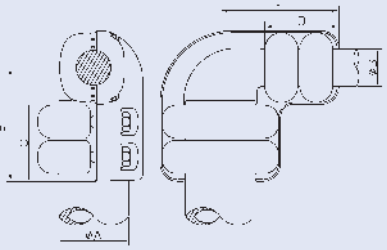

63,0	30,0	1BD010-104	1600	96	118	138	168	M10	M10
63,0	40,0	1BD010-104	1600	96	118	138	168	M10	M10
80,0	30,0	1BD010-165	1600	87	118	130	175	M12	M10
80,0	40,0	1BD010-165	1600	87	118	130	175	M12	M10
1,5“	30,0	1BD010-048	1400	95	118	130	160	M10	M10
1,5“	40,0	1BD010-136	1600	97	118	127	167	M10	M10
2“	30,0	1BD010-104	1600	96	118	138	168	M10	M10
2“	40,0	1BD010-104	1600	96	118	138	168	M10	M10
2,5“	30,0	1BD010-165	1600	87	118	130	175	M12	M10
2,5“	40,0	1BD010-165	1600	87	118	130	175	M12	M10

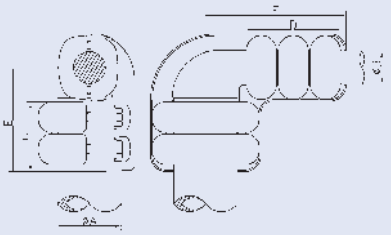

AL-90°-Flat Terminal

Conductor-Flat Terminal

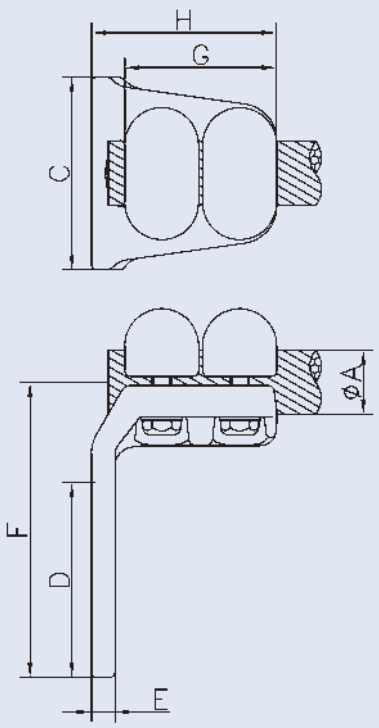

Dimension of Conductor				Code	Technical Data of Connector					
ØA		C	D		Max. Current	Dim. of Connector				Bolt Dim.
Min.	Max.					E	F	G	H	ØA
5,0	16,0	40	60	1CD010-017	450	8	83	50	64	M8
16,1	24,0	40	40	1CD010-012	600	16	77	70	100	M10
16,1	24,0	75	75	1CD010-016	1000	16	112	70	100	M10
16,1	24,0	80	80	1CD010-020	1000	14	118	70	98	M10
16,1	24,0	100	100	1CD010-024	1000	12	137	70	98	M10
24,1	25,0	60	60	1CD010-057	1250	20	103	78	104	M10
24,1	25,0	75	75	1CD010-054	1250	20	120	78	111	M10
24,1	25,0	100	100	1CD010-084	1250	15	140	78	110	M10
25,1	26,5	60	60	1CD010-057	1250	20	103	78	104	M10
25,1	26,5	75	75	1CD010-054	1250	20	120	78	111	M10
25,1	26,5	80	80	1CD010-062F	1250	15	130	78	103	M10
25,1	26,5	100	100	1CD010-084	1250	15	140	78	110	M10
26,7	33,0	60	60	1CD010-057	1250	20	103	78	104	M10
26,7	33,0	75	75	1CD010-054	1250	20	120	78	111	M10
26,7	33,0	80	80	1CD010-062	1250	15	130	78	103	M10
26,7	33,0	100	100	1CD010-084	1250	15	140	78	110	M10
42,1	52,0	80	80	1CD010-156	1800	20	137	90	123	M10
42,1	52,0	100	100	1CD010-051	1700	20	162	90	123	M10
52,1	63,0	60	60	1CD010-175	1250	20	120	90	119	M10
52,1	63,0	100	100	1CD010-180	2000	20	152	90	108	M10
52,1	63,0	125	125	1CD010-179	2000	25	185	90	119	M10
52,1	63,0	200	125	1CD010-183	2000	25	185	90	119	M10

AL-90°-Flat Terminal

Conductor-Flat Terminal

Dimension of Conductor				Code	Technical Data of Connector					
ØA		C	D		Max. Current	Dim. of Connector				Bolt Dim.
Min.	Max.					E	F	G	H	ØA
16,1	19,4	100	100	1CD010-025	1000	15	137	106	135	M10
19,5	20,5	80	80	1CD010-034F	1000	12	123	106	125	M10
19,5	20,5	100	100	1CD010-042F	1000	12	143	106	125	M10
20,6	21,9	80	80	1CD010-034	1000	12	123	106	125	M10
20,6	21,9	100	100	1CD010-042	1000	12	143	106	125	M10
22,0	23,0	40	40	1CD010-046F	500	12	83	106	125	M10
22,0	23,0	80	80	1CD010-070	1400	15	120	118	145	M10
22,0	23,0	100	100	1CD010-045F	1000	12	143	106	125	M10
23,1	24,5	40	40	1CD010-046	500	12	83	106	125	M10
23,1	24,5	80	80	1CD010-070	1400	15	120	118	145	M10
23,1	24,5	100	100	1CD010-045	1000	12	143	106	125	M10
24,6	25,5	100	100	1CD010-076	1400	15	140	118	145	M10
25,6	27,0	100	100	1CD010-165F	1250	12	150	118	146	M10
27,1	30,6	100	100	1CD010-165	1250	12	150	118	146	M10
30,7	32,2	75	75	1CD010-094F	1400	15	130	118	142	M10
30,7	32,2	100	100	1CD010-165	1250	12	150	118	146	M10
32,3	33,0	75	75	1CD010-094	1400	15	130	118	142	M10
32,3	33,0	100	100	1CD010-165	1250	12	150	118	146	M10
33,1	35,7	80	80	1CD010-126	1600	20	120	118	148	M10
33,1	35,7	200	100	1CD010-131	1600	12	130	118	143	M10
35,8	37,2	80	80	1CD010-126	1600	20	120	118	148	M10
35,8	37,2	100	100	1CD010-106F	1600	17	162	118	156	M10
35,8	37,2	200	100	1CD010-131	1600	12	130	118	143	M10
37,3	42,0	80	80	1CD010-126	1600	20	120	118	148	M10
37,3	42,0	100	100	1CD010-106	1600	17	162	118	156	M10
37,3	42,0	200	100	1CD010-131	1600	12	130	118	143	M10
42,1	52,0	80	80	1CD010-154	1600	20	135	136	170	M10
42,1	52,0	100	100	1CD010-143	2000	25	156	136	170	M10
42,1	52,0	200	100	1CD010-137	2300	25	155	136	170	M10

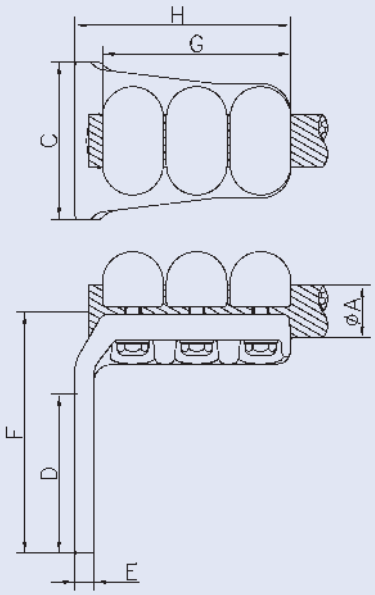

AL-90°-Flat Terminal

Tube-Flat Terminal

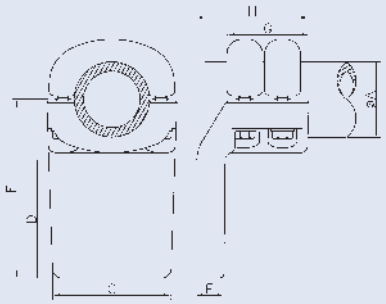

Dim. of Conductor			Code	Technical Data of Connector					
ØA	C	D		Max. Current	Dim. of Connector				Bolt Dim.
					E	F	G	H	ØA
63,0	60	60	1CD010-175	1250	20	120	90	119	M10
63,0	100	100	1CD010-180	2000	20	152	90	108	M10
63,0	125	125	1CD010-179	2000	25	185	90	119	M10
63,0	200	125	1CD010-183	2000	25	185	90	119	M10
1,5“	80	80	1CD010-156	1800	20	137	90	123	M10
1,5“	100	100	1CD010-051	1700	20	162	90	123	M10
2“	60	60	1CD010-175	1250	20	120	90	119	M10
2“	100	100	1CD010-180	2000	20	152	90	108	M10
2“	125	125	1CD010-179	2000	25	185	90	119	M10
2“	200	125	1CD010-183	2000	25	185	90	119	M10

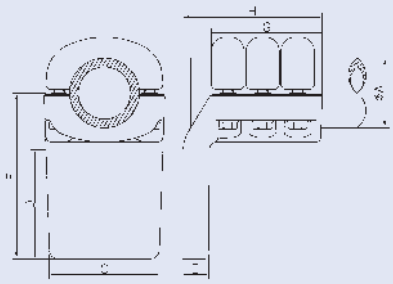

80,0	100	100	1CD010-201	3000	30	165	118	160	M12
80,0	125	125	1CD010-202	3200	30	190	118	160	M12
1,5“	80	80	1CD010-154	1600	20	135	136	170	M10
1,5“	100	100	1CD010-143	2000	25	155	136	170	M10
1,5“	200	100	1CD010-137	2300	25	155	136	170	M10
2,5“	100	100	1CD010-201	3000	30	165	118	160	M12
2,5“	125	125	1CD010-202	3200	30	190	118	160	M12

AL-Angle-Connector

Conductor-Conductor

Dimension of Conductor				Code	Technical Data of Connector					
ØA		ØB			Max. Current	Dim. of Connector			Bolt Dim.	
Min.	Max.	Min.	Max.			C	D	α	ØA	ØB
24,1	33,0	16,1	24,0	1AC010-020	1000	78	70	45°	M10	M10
42,1	52,0	33,1	42,0	1AE010-050	1400	90	78	15°	M10	M10
52,1	63,0	33,1	42,0	1AE010-065	1400	90	78	15°	M10	M10
52,1	63,0	52,1	63,0	1AE010-066	2000	90	90	15°	M10	M10
52,1	63,0	52,1	63,0	1AE010-060	2200	90	90	30°	M10	M10

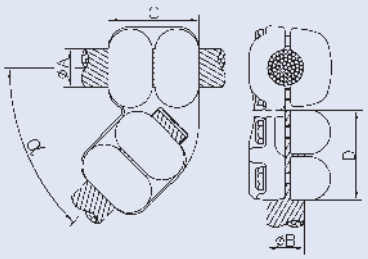

16,1	24,0	16,1	24,0	1AC010-013	1000	106	106	45°	M10	M10
24,1	31,4	24,1	33,0	1AE010-020	1400	118	118	30°	M10	M10
24,1	31,4	24,1	33,0	1AC010-036	1600	136	136	45°	M10	M10
24,1	31,4	33,1	42,0	1AC010-037	1600	136	136	45°	M10	M10
24,1	31,4	42,1	44,0	1AC010-042	1600	136	136	45°	M10	M10
31,5	33,0	24,1	31,4	1AE010-020	1400	118	118	30°	M10	M10
31,5	33,0	31,5	33,0	1AE010-020	1400	118	118	30°	M10	M10
31,5	33,0	24,1	31,4	1AC010-036	1600	136	136	45°	M10	M10
31,5	33,0	31,5	33,0	1AC010-034	1400	118	118	45°	M10	M10
31,5	33,0	33,1	42,0	1AC010-037	1600	136	136	45°	M10	M10
31,5	33,0	42,1	44,0	1AC010-042	1600	136	136	45°	M10	M10
33,1	42,0	33,1	42,0	1AC010-039	2000	136	136	45°	M10	M10
42,1	44,0	24,1	33,0	1AC010-045	1600	136	106	45°	M10	M10
42,1	44,0	42,1	44,0	1AC010-046	1600	118	118	45°	M10	M10
42,1	44,0	44,1	52,0	1AC010-048	2300	136	136	45°	M10	M10
44,1	52,0	44,1	52,0	1AC010-048	2300	136	136	45°	M10	M10

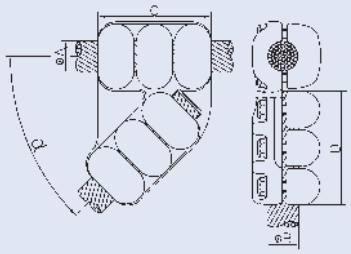

AL-Angle-Connector

Tube-Conductor

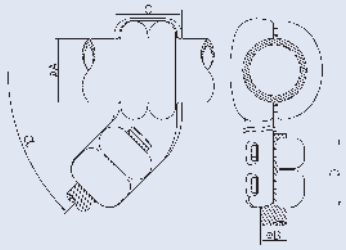

Dim. of Conductor			Code	Technical Data of Connector					
ØA	ØB			Max. Current	Dim. of Connector			Bolt Dim.	
	Min.	Max.			C	D	α	ØA	ØB
63,0	33,1	42,0	1AE010-065	1400	102	78	15°	M10	M10
63,0	52,1	63,0	1AE010-066	2000	102	90	15°	M10	M10
63,0	52,1	63,0	1AE010-060	2200	102	90	30°	M10	M10
80,0	42,1	52,0	1AE010-081	1700	96	90	15°	M12	M10
80,0	52,1	63,0	1AE010-082	2200	96	90	15°	M12	M10
100,0	52,1	63,0	1AE010-114	2200	100	90	15°	M12	M10
120,0	52,1	63,0	1AE010-131	2200	96	90	15°	M12	M10
1,5“	33,1	42,0	1AE010-050	1400	100	78	15°	M10	M10
2“	33,1	42,0	1AE010-065	1400	102	78	15°	M10	M10
2“	52,1	63,0	1AE010-066	2000	102	90	15°	M10	M10
2“	52,1	63,0	1AE010-060	2200	102	90	30°	M10	M10
2,5“	42,1	52,0	1AE010-081	1700	96	90	15°	M12	M10
2,5“	52,1	63,0	1AE010-082	2200	96	90	15°	M12	M10
3“	33,1	42,0	1AE010-106	1400	96	78	15°	M12	M10
3“	42,1	52,0	1AE010-108	1700	96	90	15°	M12	M10
3“	52,1	63,0	1AE010-102	2200	96	90	15°	M12	M10
3,5“	52,1	63,0	1AE010-114	2200	100	90	15°	M12	M10
4“	52,1	63,0	1AE010-131	2200	96	90	15°	M12	M10
4,5“	52,1	63,0	1AE010-131	2200	96	90	15°	M12	M10

AL-Angle-Connector

Tube-Conductor

Dim. of Conductor			Code	Technical Data of Connector					
ØA	ØB			Max. Current	Dim. of Connector			Bolt Dim.	
	Min.	Max.			C	D	α	ØA	ØB
63,0	33,1	42,0	1BC010-136	1400	96	78	45°	M10	M10
63,0	42,1	52,0	1BC010-140	1700	96	90	45°	M10	M10
63,0	52,1	63,0	1BC010-138	2200	96	90	45°	M10	M10
80,0	24,1	33,0	1BC010-149	1250	87	78	45°	M12	M10
100,0	33,1	42,0	1BC010-156	1400	93	78	45°	M12	M10
1,5“	16,1	24,0	1BE010-064	1000	96	70	30°	M10	M10
1,5“	16,1	24,0	1BC010-038	1000	96	70	45°	M10	M10
1,5“	24,1	33,0	1BC010-102	1200	90	70	45°	M10	M10
1,5“	24,1	33,0	1BE010-050	1250	96	78	60°	M10	M10
1,5“	33,1	42,0	1BC010-104	1400	98	78	45°	M10	M10
1,5“	42,1	52,0	1BC010-120	1700	90	90	45°	M10	M10
1,5“	52,1	63,0	1BC010-140	1700	96	90	45°	M10	M10
2“	33,1	42,0	1BC010-136	1400	96	78	45°	M10	M10
2“	42,1	52,0	1BC010-140	1700	96	90	45°	M10	M10
2“	52,1	63,0	1BC010-138	2200	96	90	45°	M10	M10
2,5“	24,1	33,0	1BC010-149	1250	87	78	45°	M12	M10
3“	52,1	63,0	1BC010-155	2200	87	90	45°	M12	M10
3,5“	33,1	42,0	1BC010-156	1400	93	78	45°	M12	M10

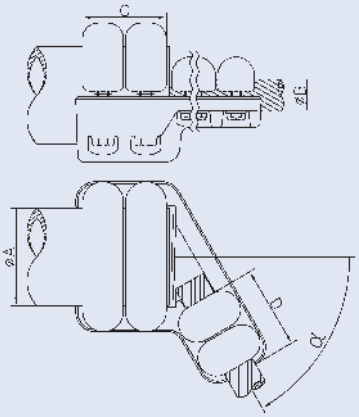

63,0	24,1	33,0	1BC010-077	1400	96	118	45°	M10	M10
63,0	33,1	42,0	1BC010-134	1600	96	118	45°	M10	M10
80,0	33,1	42,0	1BC010-153	1600	87	118	45°	M12	M10
100,0	24,1	33,0	1BE010-098	1400	93	118	60°	M12	M10
1,5“	16,1	24,0	1BC010-036	800	90	106	45°	M10	M10
1,5“	24,1	33,0	1BC010-077	1400	96	118	45°	M10	M10
1,5“	33,1	42,0	1BC010-106	1600	96	118	45°	M10	M10
2“	24,1	33,0	1BC010-077	1400	96	118	45°	M10	M10
2“	33,1	42,0	1BC010-134	1600	96	118	45°	M10	M10
2,5“	33,1	42,0	1BC010-153	1600	87	118	45°	M12	M10
3,5“	24,1	33,0	1BE010-098	1400	93	118	60°	M12	M10

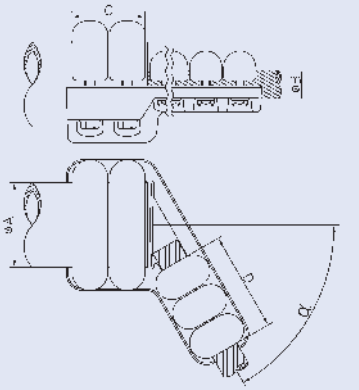

AL-Angle-Connector

Tube-Tube

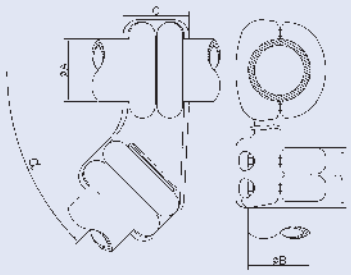

Dim. of Conductor		Code	Technical Data of Connector					
ØA	ØB		Max. Current	Dim. of Connector			Bolt Dim.	
				C	D	α	ØA	ØB
63,0	63,0	1AE010-066	2000	102	96	15°	M10	M10
63,0	63,0	1AE010-060	2200	102	96	30°	M10	M10
80,0	63,0	1AE010-082	2200	96	96	15°	M12	M10
100,0	63,0	1AE010-114	2200	100	96	15°	M12	M10
100,0	80,0	1AE010-116	2400	98	87	10°	M12	M12
100,0	80,0	1AC010-082	2200	106	90	45°	M12	M12
100,0	100,0	1AE010-118	2600	98	92	15°	M12	M12
100,0	100,0	1AE010-117	2600	98	92	20°	M12	M12
100,0	100,0	1AC010-100	2600	106	96	45°	M12	M12
120,0	63,0	1AE010-131	2200	96	96	15°	M12	M10
120,0	80,0	1AE010-135	2400	96	87	10°	M12	M12
120,0	80,0	1AE010-134	2400	96	87	15°	M12	M12
120,0	120,0	1AE010-138	3000	96	87	15°	M12	M12
120,0	120,0	1AC010-121	3000	96	87	45°	M12	M12
2“	2“	1AE010-066	2000	102	96	15°	M10	M10
2“	2“	1AE010-060	2200	102	96	30°	M10	M10
2,5“	2“	1AE010-082	2200	96	96	15°	M12	M10
3“	1,5“	1AE010-108	1700	96	96	15°	M12	M10
3“	2“	1AE010-102	2200	96	96	15°	M12	M10
3“	2,5“	1AE010-100	2400	96	87	10°	M12	M12
3,5“	2“	1AE010-114	2200	100	96	15°	M12	M10
3,5“	2,5“	1AE010-116	2400	98	87	10°	M12	M12
3,5“	2,5“	1AC010-082	2200	106	90	45°	M12	M12
3,5“	3,5“	1AE010-118	2600	98	92	15°	M12	M12
3,5“	3,5“	1AE010-117	2600	98	92	20°	M12	M12
3,5“	3,5“	1AC010-100	2600	106	96	45°	M12	M12
4“	2“	1AE010-131	2200	96	90	15°	M12	M10
4“	2,5“	1AE010-135	2400	96	87	10°	M12	M12
4“	2,5“	1AE010-134	2400	96	87	15°	M12	M12
4“	4“	1AE010-138	3000	96	87	15°	M12	M12
4“	4“	1AC010-121	3000	96	87	45°	M12	M12
4“	4,5“	1AE010-138	3000	96	87	15°	M12	M12
4“	4,5“	1AC010-121	3000	96	87	45°	M12	M12
4,5“	2“	1AE010-131	2200	96	90	15°	M12	M10
4,5“	2,5“	1AE010-135	2400	96	87	10°	M12	M12
4,5“	2,5“	1AE010-134	2400	96	87	15°	M12	M12
4,5“	4“	1AE010-138	3000	96	87	15°	M12	M12

AL-Angle-Connector

Tube-Tube

Dimension of Conductor		Code	Technical Data of Connector					
			Max. Current	Dim. of Connector			Bolt Dim.	
ØA	ØB			C	D	α	ØA	ØB
4,5″	4″	1AC010-121	3000	96	87	45°	M12	M12
4,5″	4,5″	1AE010-138	3000	96	87	15°	M12	M12
4,5″	4,5″	1AC010-121	3000	96	87	45°	M12	M12

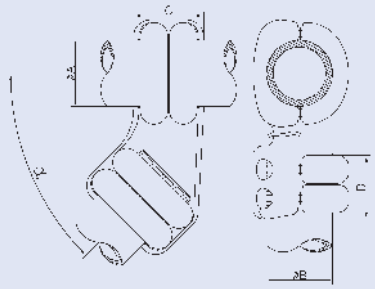

80,0	80,0	1AC010-060	2200	100	90	45°	M12	M12
120,0	120,0	1AC010-120	4000	142	130	45°	M12	M12
160,0	160,0	1AE010-175	5000	142	130	25°	M12	M12
1,5″	1,5″	1AC010-048	2300	136	136	45°	M12	M10
2,5″	2,5″	1AC010-060	2200	100	90	45°	M12	M12
4″	4″	1AC010-121	4000	142	130	45°	M12	M12
4″	4,5″	1AC010-121	4000	142	130	45°	M12	M12
4,5″	4″	1AC010-121	4000	142	130	45°	M12	M12
4,5″	4,5″	1AC010-121	4000	142	130	45°	M12	M12
5″	5″	1AE010-175	5000	142	130	25°	M12	M12

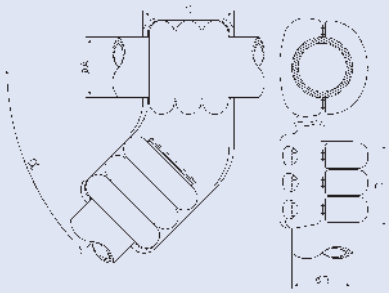

AL-Angle-Connector

Tube-Tube

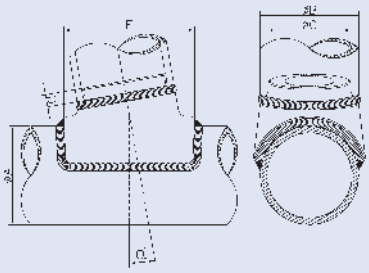

Dimension of Conductor				Code	Technical Data of Connector			
ØA	ØB	ØC			Max. Current	Dim. of Connector		
		Min.	Max.			D	E	α
120,0	63,0	47,0	47,0	1AE195-120	1600	15	100	15°
120,0	120,0	100,0	104,0	1AE195-121	3500	15	160	10°
160,0	120,0	100,0	104,0	1AE195-160	3500	15	160	10°
160,0	160,0	140,0	148,0	1AE195-167	3500	15	200	10°
250,0	160,0	140,0	148,0	1AE195-081	3150	15	250	10°
2″	2″	49,0	52,3	1AE195-062	1600	15	80	10°
3″	1,5″	37,9	40,6	1AE195-075	1600	15	100	15°
3″	3″	73,5	73,5	1AE195-089	2000	15	120	10°
3″	3″	73,5	77,7	1AE195-088	2000	15	120	15°
4,5″	2″	49,0	49,0	1AE195-120	1600	15	100	15°
5″	3″	73,5	73,5	1AE195-141	2000	15	120	10°
5″	3″	73,5	77,7	1AE195-142	2000	15	120	15°
5″	5″	122,3	122,3	1AE195-143	3000	15	200	15°
5″	5″	122,3	122,3	1AE195-144	3000	15	200	45°
6″	6″	146,0	146,0	1AE195-168	3500	15	200	10°

AL-Angle-Connector

Tube-Tube

Dim. of Conductor		Code	Technical Data of Connector					
ØA	ØB		Max. Current	Dim. of Connector			Bolt Dim.	
				C	D	α	ØA	ØB
63,0	63,0	1AF500-062	3200	96	96	30°	M10	M10
80,0	63,0	1AF500-060	2200	100	106	30°	M12	M10
100,0	63,0	1AF500-102	2600	100	96	30°	M12	M10
100,0	100,0	1AF500-100	2600	98	93	30°	M12	M12
120,0	63,0	1AF500-122	2200	96	96	30°	M12	M10
120,0	80,0	1AF500-151	2400	102	90	20°	M12	M12
120,0	80,0	1AF500-114	2600	96	93	30°	M12	M12
120,0	120,0	1AF500-120	3000	96	93	30°	M12	M12
120,0	160,0	1AF500-161	3000	102	90	30°	M12	M12
160,0	80,0	1AF500-157	2400	102	90	30°	M12	M12
2“	2“	1AF500-062	3200	96	96	30°	M10	M10
2,5“	2“	1AF500-060	2200	100	106	30°	M12	M10
3“	1,5“	1AF500-053	1700	96	96	30°	M12	M10
3“	2“	1AF500-092	2200	86	96	30°	M12	M10
3,5“	2“	1AF500-102	2600	100	96	30°	M12	M10
3,5“	3,5“	1AF500-100	2600	98	93	30°	M12	M12
4“	2“	1AF500-122	2200	96	96	30°	M12	M10
4“	2,5“	1AF500-151	2400	102	90	20°	M12	M12
4“	2,5“	1AF500-114	2600	96	93	30°	M12	M12
4“	4“	1AF500-120	3000	96	93	30°	M12	M12
4“	4,5“	1AF500-120	3000	96	93	30°	M12	M12
4“	5“	1AF500-161	3000	102	90	30°	M12	M12
4,5“	2“	1AF500-122	2200	96	96	30°	M12	M10
4,5“	2,5“	1AF500-151	2400	102	90	20°	M12	M12
4,5“	2,5“	1AF500-114	2600	96	93	30°	M12	M12
4,5“	4“	1AF500-120	3000	96	93	30°	M12	M12
4,5“	4,5“	1AF500-120	3000	96	93	30°	M12	M12
4,5“	5“	1AF500-161	3000	102	90	30°	M12	M12
5“	2,5“	1AF500-157	2400	102	90	30°	M12	M12

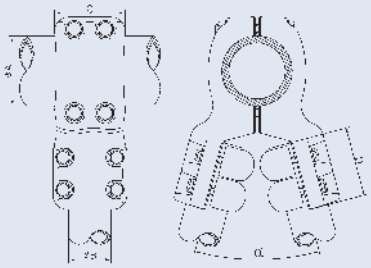

AL-Angle-Connector

Tube-Tube

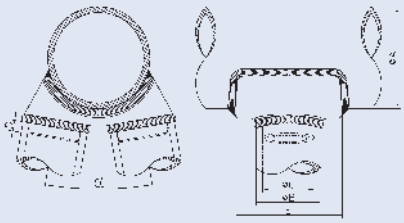

Dimension of Conductor				Code	Technical Data of Connector			
ØA	ØB	ØC			Max. Current	Dim. of Connector		
		Min.	Max.			D	E	α
120,0	63,0	47,0	47,0	1AF595-120	3200	15	100	30°
160,0	120,0	100,0	104,0	1AF595-161	3200	15	168	20°
250,0	120,0	100,0	104,0	1AF595-250	3200	15	170	20°
250,0	160, 0	140,0	148,0	1AF595-249	3200	15	334	20°
3“	1,5“	37,9	40,6	1AF595-065	1600	15	100	30°
3“	2“	49,0	52,3	1AF595-070	2000	15	100	20°
4,5“	2“	49,0	49,0	1AF595-120	3200	15	100	30°
5“	3“	73,5	73,5	1AF595-142	4000	15	149	20°
5“	3“	77,7	77,7	1AF595-141	3000	15	150	20°
5“	5“	122,3	122,3	1AF595-143	3000	15	186	30°
6“	3“	73,5	73,5	1AF595-168	3200	15	120	20°

AL-Angle-Connector

Tube-Tube

Dim. of Conductor		Code	Technical Data of Connector					
ØA	ØB		Max. Current	Dim. of Connector			Bolt Dim.	
				C	D	α	ØA	ØB
63,0	63,0	1BC010-138	2200	96	96	45°	M10	M10
80,0	80,0	1BE010-080	2400	85	85	30°	M12	M12
80,0	80,0	1BC010-152	2400	85	85	45°	M12	M12
100,0	100,0	1BE010-103	2600	93	93	15°	M12	M12
100,0	100,0	1BC010-059	2600	93	93	45°	M12	M12
1,5“	1,5“	1BC010-120	1700	90	90	45°	M10	M10
1,5“	2“	1BC010-140	1700	96	96	45°	M10	M10
2“	1,5“	1BC010-140	1700	96	96	45°	M10	M10
2“	2“	1BC010-138	2200	96	96	45°	M10	M10
2,5“	2,5“	1BE010-080	2400	85	85	30°	M12	M12
2,5“	2,5“	1BC010-152	2400	85	85	45°	M12	M12
3“	1,5“	1BC010-155	2200	87	96	45°	M12	M10
3“	2“	1BC010-155	2200	87	96	45°	M12	M10
3,5“	3,5“	1BE010-103	2600	93	93	15°	M12	M12
3,5“	3,5“	1BC010-059	2600	93	93	45°	M12	M12

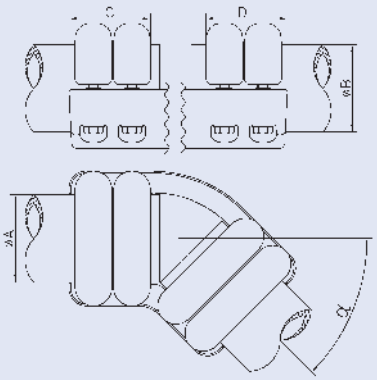

AL-Angle-Terminal

Stud-Conductor

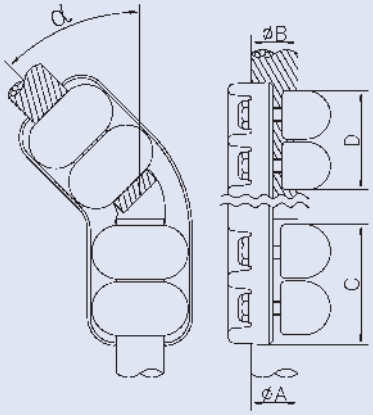

Dim. of Conductor			Code	Technical Data of Connector					
ØA	ØB			Max. Current	Dim. of Connector			Bolt Dim.	
	Min.	Max.			C	D	α	ØA	ØB
30,0	5,0	16,0	1BC010-010	450	70	62	45°	M8	M10
30,0	16,1	24,0	1BE010-020	1000	78	70	30°	M10	M10
30,0	16,1	24,0	1BC010-026	800	70	70	45°	M10	M10
30,0	24,1	25,5	1BC010-044	1200	70	78	45°	M10	M10
30,0	25,6	33,0	1BC010-056	1200	70	70	45°	M10	M10
30,0	33,1	42,0	1BC010-052	1250	78	78	45°	M10	M10
30,0	42,1	52,0	1BC010-102	1200	70	90	45°	M10	M10
30,0	42,1	52,0	1BE010-050	1250	85	90	60°	M10	M10
30,0	52,1	63,0	1BC010-136	1400	85	90	45°	M10	M10
40,0	16,1	24,0	1BE010-064	1000	96	70	30°	M10	M10
40,0	16,1	24,0	1BC010-038	1000	96	70	45°	M10	M10
40,0	24,1	33,0	1BC010-052	1250	78	78	45°	M10	M10
40,0	24,1	33,0	1BE010-050	1250	96	78	60°	M10	M10
40,0	33,1	42,0	1BC010-104	1400	98	78	45°	M10	M10
40,0	42,1	52,0	1BC010-104	1400	78	98	45°	M10	M10
40,0	52,1	63,0	1BC010-136	1400	85	90	45°	M10	M10
50,0	16,1	24,0	1BE010-064	1000	96	70	30°	M10	M10
50,0	16,1	24,0	1BC010-038	1000	96	70	45°	M10	M10
50,0	24,1	33,0	1BC010-102	1200	90	70	45°	M10	M10
50,0	24,1	33,0	1BE010-050	1250	96	78	60°	M10	M10
50,0	33,1	42,0	1BC010-136	1400	98	78	45°	M10	M10
50,0	42,1	52,0	1BC010-120	1700	90	90	45°	M10	M10
50,0	52,1	63,0	1BC010-140	1700	96	90	45°	M10	M10
60,0	33,1	42,0	1BC010-136	1400	96	78	45°	M10	M10
60,0	42,1	52,0	1BC010-140	1700	96	90	45°	M10	M10
60,0	52,1	63,0	1BC010-138	2200	96	90	45°	M10	M10

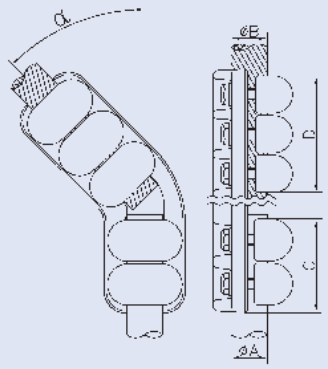

30,0	16,1	24,0	1BC010-030	1000	85	106	45°	M10	M10
30,0	24,1	33,0	1BE010-023	1250	85	118	15°	M10	M10
30,0	24,1	33,0	1BE010-025	1250	85	118	30°	M10	M10
30,0	24,1	33,0	1BC010-064	1250	85	118	45°	M10	M10
30,0	24,1	33,0	1BE010-034	1250	85	118	60°	M10	M10
30,0	33,1	42,0	1BE010-040	1250	85	118	30°	M10	M10
30,0	33,1	42,0	1BC010-086	1200	70	118	45°	M10	M10
30,0	42,1	52,0	1BC010-108	1400	78	136	45°	M10	M10
40,0	16,1	24,0	1BC010-036	800	90	106	45°	M10	M10
40,0	24,1	33,0	1BC010-070	1250	85	118	45°	M10	M10

AL-Angle-Terminal

Stud-Conductor

Dim. of Conductor			Code	Technical Data of Connector					
ØA	ØB			Max. Current	Dim. of Connector			Bolt Dim.	
	Min.	Max.			C	D	α	ØA	ØB
40,0	33,1	42,0	1BE010-040	1400	85	118	30°	M10	M10
40,0	33,1	42,0	1BC010-106	1600	96	118	45°	M10	M10
40,0	42,1	52,0	1BC010-108	1400	78	136	45°	M10	M10
50,0	16,1	24,0	1BC010-036	800	90	106	45°	M10	M10
50,0	24,1	33,0	1BC010-077	1400	96	118	45°	M10	M10
50,0	33,1	42,0	1BC010-106	1600	96	118	45°	M10	M10
60,0	24,1	33,0	1BC010-077	1400	96	118	45°	M10	M10
60,0	33,1	42,0	1BC010-134	1600	96	118	45°	M10	M10

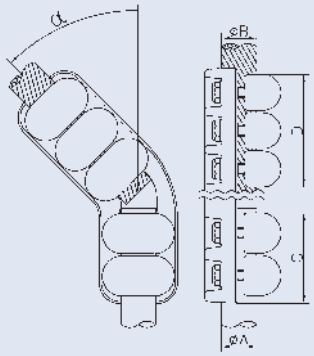

30,0	24,1	33,0	1BC010-049	1400	125	118	45°	M10	M10
30,0	42,1	52,0	1BC010-110	1600	125	136	45°	M10	M10
40,0	33,1	42,0	1BC010-110	1600	142	118	45°	M10	M10
40,0	42,1	52,0	1BE010-065	2300	142	136	30°	M10	M10
40,0	42,1	52,0	1BC010-110	1600	125	136	45°	M10	M10
50,0	33,1	42,0	1BC010-110	1600	142	118	45°	M10	M10
50,0	42,1	52,0	1BE010-065	2300	124	136	30°	M10	M10

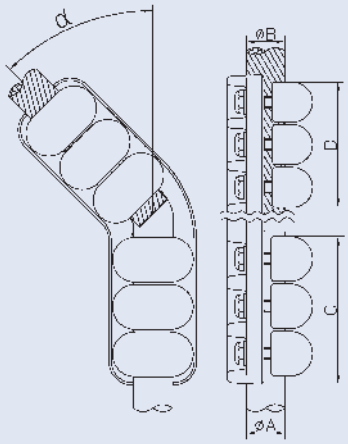

AL-Angle-Terminal

Tube-Stud

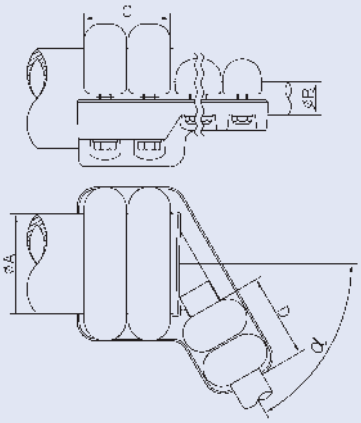

Dim. of Conductor		Code	Technical Data of Connector					
ØA	ØB		Max. Current	Dim. of Connector			Bolt Dim.	
				C	D	α	ØA	ØB
63,0	30,0	1BC010-136	1400	96	85	45°	M10	M10
63,0	40,0	1BC010-140	1700	96	96	45°	M10	M10
63,0	50,0	1BC010-138	2200	96	96	45°	M10	M10
63,0	60,0	1BC010-138	2200	96	96	45°	M10	M10
80,0	30,0	1BC010-149	1250	87	85	45°	M12	M10
100,0	30,0	1BC010-156	1400	93	85	45°	M12	M10
100,0	40,0	1BC010-156	1400	93	85	45°	M12	M10
1,5“	30,0	1BC010-102	1200	90	70	45°	M10	M10
1,5“	30,0	1BE010-050	1250	96	85	60°	M10	M10
1,5“	40,0	1BC010-104	1400	98	78	45°	M10	M10
1,5“	50,0	1BC010-120	1700	90	90	45°	M10	M10
1,5“	60,0	1BC010-140	1700	96	96	45°	M10	M10
2“	30,0	1BC010-136	1400	96	85	45°	M10	M10
2“	40,0	1BC010-140	1700	96	96	45°	M10	M10
2“	50,0	1BC010-140	1700	96	96	45°	M10	M10
2“	60,0	1BC010-138	2200	96	96	45°	M10	M10
2,5“	30,0	1BC010-149	1250	87	85	45°	M12	M10
3“	50,0	1BC010-155	2200	87	96	45°	M12	M10
3“	60,0	1BC010-155	2200	87	96	45°	M12	M10
3,5“	30,0	1BC010-156	1400	93	85	45°	M12	M10
3,5“	40,0	1BC010-156	1400	93	85	45°	M12	M10

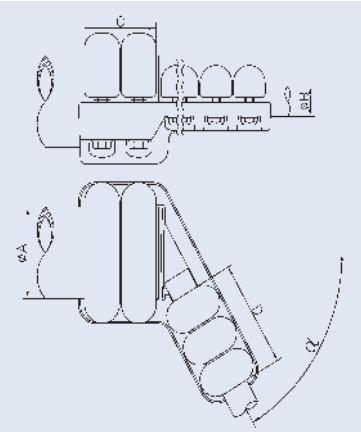

63,0	30,0	1BC010-077	1400	96	125	45°	M10	M10
63,0	40,0	1BC010-134	1600	96	125	45°	M10	M10
80,0	30,0	1BC010-153	1600	87	125	45°	M12	M10
80,0	40,0	1BC010-153	1600	87	125	45°	M12	M10
100,0	30,0	1BE010-098	1400	93	125	60°	M12	M10
1,5“	30,0	1BC010-077	1400	96	125	45°	M10	M10
1,5“	40,0	1BC010-106	1600	96	125	45°	M10	M10
2“	30,0	1BC010-077	1400	96	125	45°	M10	M10
2“	40,0	1BC010-134	1600	96	125	45°	M10	M10
2,5“	30,0	1BC010-153	1600	87	125	45°	M12	M10
2,5“	40,0	1BC010-153	1600	87	125	45°	M12	M10
3,5“	30,0	1BE010-098	1400	93	125	60°	M12	M10

AL-Angle-Flat Terminal

Conductor-Flat Terminal

Dimension of Conductor				Code	Technical Data of Connector					
ØA		C	D		Max. Current	Dim. of Connector				Bolt Dim.
Min.	Max.					E	F	G	α	ØA
16,1	24,0	75	75	1CE010-020	1000	15	70	168	30°	M10
16,1	24,0	75	75	1CC010-006	800	15	70	150	45°	M10
16,1	24,0	100	100	1CC010-134	1000	12	70	177	45°	M10
24,1	25,0	80	80	1CC010-158	1250	15	78	167	45°	M10
24,1	25,0	100	100	1CC010-166	1250	15	78	181	45°	M10
25,1	26,5	80	80	1CE010-026F	1250	15	78	172	30°	M10
25,1	26,5	80	80	1CC010-158	1250	15	78	167	45°	M10
25,1	26,5	100	100	1CC010-166	1250	15	78	181	45°	M10
26,6	33,0	80	80	1CE010-026	1250	15	78	172	30°	M10
26,6	33,0	80	80	1CC010-158	1250	15	78	167	45°	M10
26,6	33,0	100	100	1CC010-166	1250	15	78	181	45°	M10
52,1	63,0	80	80	1CC010-293	1800	20	90	194	45°	M10
52,1	63,0	100	100	1CC010-294	2000	20	90	208	45°	M10

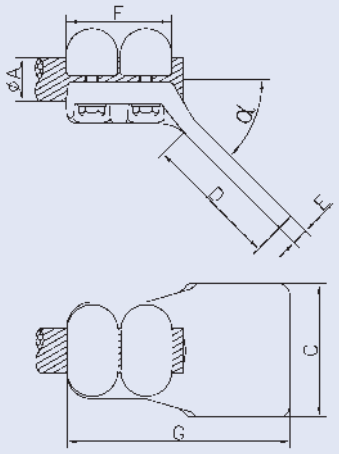

AL-Angle-Flat Terminal

Conductor-Flat Terminal

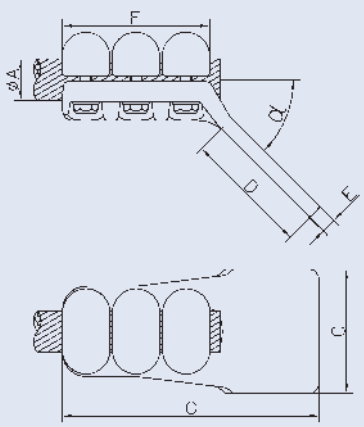

Dimension of Conductor				Code	Technical Data of Connector					
ØA		C	D		Max. Current	Dim. of Connector				Bolt Dim.
Min.	Max.					E	F	G	α	ØA
16,1	19,4	100	100	1CC010-138	1000	12	106	213	45°	M10
19,5	20,5	40	40	1CC010-143F	500	12	106	157	45°	M10
19,5	20,5	60	60	1CE010-024F	720	12	106	182	30°	M10
19,5	20,5	60	60	1CC010-130F	1000	12	106	175	45°	M10
19,5	20,5	100	100	1CE010-023F	1000	12	106	220	30°	M10
19,5	20,5	100	100	1CC010-146F	1000	12	106	199	45°	M10
20,5	21,9	40	40	1CC010-143	500	12	106	157	45°	M10
20,5	21,9	60	60	1CE010-024	720	12	106	182	30°	M10
20,5	21,9	60	60	1CC010-130	1000	12	106	175	45°	M10
20,5	21,9	100	100	1CE010-023	1000	12	106	220	30°	M10
20,5	21,9	100	100	1CC010-146	1000	12	106	199	45°	M10
22,0	23,0	40	40	1CC010-144F	500	12	106	157	45°	M10
22,0	23,0	80	80	1CC010-174	1400	15	118	207	45°	M10
22,0	23,0	100	100	1CC010-148F	1000	12	106	199	45°	M10
22,0	23,0	125	125	1CC010-183	1400	25	118	242	45°	M10
23,1	24,5	40	40	1CC010-144	500	12	106	157	45°	M10
23,1	24,5	80	80	1CC010-174	1400	15	118	207	45°	M10
23,1	24,5	100	100	1CC010-148	1000	12	106	199	45°	M10
23,1	24,5	125	125	1CC010-183	1400	25	118	242	45°	M10
24,6	25,5	80	80	1CC010-174	1400	15	118	207	45°	M10
24,6	25,5	100	100	1CC010-182	1400	15	118	230	45°	M10
24,6	25,5	125	125	1CC010-183	1400	25	118	242	45°	M10
25,6	27,0	80	80	1CE010-029F	1250	12	118	208	30°	M10
25,6	27,0	80	80	1CC010-174	1400	15	118	207	45°	M10
25,6	27,0	100	100	1CE010-027F	1250	12	118	226	30°	M10
25,6	27,0	100	100	1CC010-165F	1250	12	118	205	45°	M10
25,6	27,0	125	125	1CC010-183	1400	25	118	242	45°	M10
27,1	31,4	80	80	1CE010-029	1250	12	118	208	30°	M10
27,1	31,4	80	80	1CC010-174	1400	15	118	207	45°	M10
27,1	31,4	100	100	1CE010-027	1250	12	118	226	30°	M10
27,1	31,4	100	100	1CC010-165	1250	12	118	205	45°	M10
27,1	31,4	125	125	1CC010-183	1400	25	118	242	45°	M10
31,5	32,2	75	75	1CC010-190	1400	15	118	201	45°	M10
31,5	32,2	80	80	1CE010-029	1250	12	118	208	30°	M10
31,5	32,2	80	80	1CC010-174	1400	15	118	207	45°	M10
31,5	32,2	100	100	1CE010-028F	1600	15	118	208	15°	M10

AL-Angle-Flat Terminal

Conductor-Flat Terminal

Dimension of Conductor				Code	Technical Data of Connector					
ØA		C	D		Max. Current	Dim. of Connector				Bolt Dim.
Min.	Max.					E	F	G	α	ØA
31,5	32,2	100	100	1CE010-027	1250	12	118	226	30°	M10
31,5	32,2	100	100	1CC010-165	1250	12	118	205	45°	M10
31,5	32,2	125	125	1CC010-183	1400	25	118	242	45°	M10
32,3	33,0	75	75	1CC010-190	1400	15	118	201	45°	M10
32,3	33,0	80	80	1CE010-029	1250	12	118	208	30°	M10
32,3	33,0	80	80	1CC010-174	1400	15	118	207	45°	M10
32,3	33,0	100	100	1CE010-027	1250	12	118	226	30°	M10
32,3	33,0	100	100	1CC010-165	1250	12	118	205	45°	M10
32,3	33,0	125	125	1CC010-183	1400	25	118	242	45°	M10
42,1	52,0	100	100	1CC010-278	2000	25	136	245	45°	M10

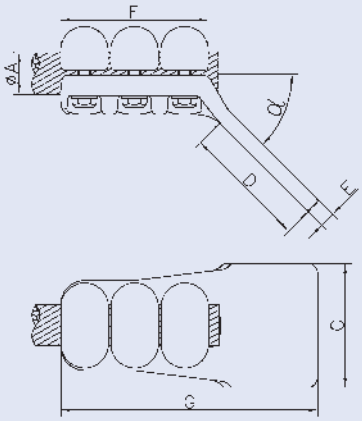

AL-Angle-Welded-Connector

Tube-Tube

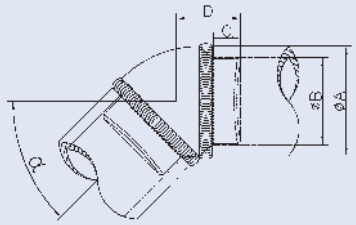

Dim. of Conductor			Code	Technical Data of Connector			
ØA	ØB			Max. Current	Dim. of Connector		
	Min.	Max.			C	D	α
80,0	64,0	72,0	1BC201-080	2000	20	42	45°
120,0	100,0	104,0	1AE201-120	2500	30	56	30°
120,0	100,0	104,0	1AE201-121	2500	30	75	60°
160,0	140,0	150,0	1AE201-160	4050	30	59	30°
160,0	140,0	148,0	1BC201-160	4050	20	60	45°
3“	73,5	77,7	1AE201-089	2000	30	51	30°
3“	73,5	77,7	1AE201-090	2000	30	65	60°
4,5“	108,9	114,4	1AE201-127	2500	30	199	45°
5“	122,3	128,6	1AE202-096	3100	35	79	45°

AL-Support

Conductor

Dim. of Conductor ØA		Code	Technical Data of Support								
			B	Bolt Dim.	Baseplate						
					Dimension			Drillingplan			
Min.	Max.			ØA	ØC	ØD	E	Pcs.	ØF	±α	β
5,0	16,0	1DC010-010	103	M8	127	160	6	8	18		
16,1	22,0	1DC010-026	113	M10	66	90	6	4	12		
16,1	22,0	1DC010-020	113	M10	76	100	6	4	14		
16,1	22,0	1DC010-023	113	M10	120	145	6	4	14		
16,1	22,0	1DC010-024	113	M10	127	160	6	8	18		
22,1	30,0	1DC010-031	100	M10	66	100	6	8	12		
22,1	30,0	1DC010-032	100	M10	66	108	6	4	12		
22,1	30,0	1DC010-045	90	M10	76	100	6	8	14		
22,1	30,0	1DC010-030	115	M10	76	100	6	4	14		
22,1	30,0	1DC010-033	115	M10	120	145	6	8	14		
22,1	30,0	1DC010-034	115	M10	120	145	6	4	14		
22,1	30,0	1DC010-035	115	M10	120	145	6	4	14	5°	
22,1	30,0	1DC010-040	100	M10	127	160	6	4	18	5°	
22,1	30,0	1DC010-037	115	M10	127	160	6	8	18		
22,1	30,0	1DC010-042	115	M10	127	160	6	8	18		
22,1	30,0	1DC010-046	150	M10	127	160	6	4	18		
22,1	30,0	1DC010-036	115	M10	225	260	6	4	18	5°	45°
30,1	40,0	1DC010-060	119	M10	66	92	6	4	12		
30,1	40,0	1DC010-062	104	M10	76	140	6	4	14		
30,1	40,0	1DC010-066	100	M10	120	145	6	4	14		
30,1	40,0	1DC010-064	119	M10	120	145	6	4	14		
30,1	40,0	1DC010-065	119	M10	120	145	6	4	14	5°	
30,1	40,0	1DC010-072	100	M10	127	160	6	4	18		
30,1	40,0	1DC010-041	119	M10	127	160	6	4	18		45°
30,1	40,0	1DC010-074	119	M10	127	160	6	8	18		
30,1	40,0	1DC010-076	119	M10	127	160	6	4	18		45°
30,1	40,0	1DC010-080	150	M10	127	160	6	4	18		
30,1	40,0	1DC010-070	119	M10	225	260	6	4	18	5°	45°
40,1	50,0	1DC010-103	130	M10	120	145	6	4	14		
40,1	50,0	1DC010-100	124	M10	127	160	6	4	18		45°
40,1	50,0	1DC010-105	124	M10	127	160	15	8	18		

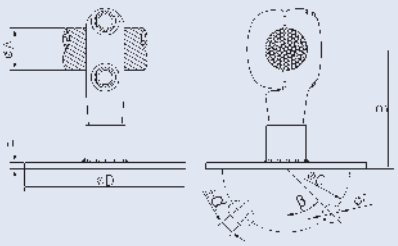

AL-Earthing-Stirrup

Conductor

Dim. of Conductor		Code	Technical Data			
ØA			Dim. of Earthing-Stirrup			Bolt Dim.
Min.	Max.		D	E	C	ØA
16,1	24,0	1DG010-025	110	120	20	M10
16,1	24,0	1DG010-021	110	120	25	M10
16,1	24,0	1DG010-020	110	120	30	M10
16,1	24,0	1DG010-024	120	165	30	M10
16,1	24,0	1DG010-022	150	130	25	M10
24,1	31,3	1DG010-030	80	110	25	M10
24,1	31,3	1DG010-028	110	120	25	M10
24,1	31,3	1DG010-034	110	120	30	M10
24,1	31,3	1DG010-029	110	150	25	M10
24,1	31,3	1DG010-027	120	195	30	M10
31,4	33,0	1DG010-036	80	110	25	M10
31,4	33,0	1DG010-028	110	120	25	M10
31,4	33,0	1DG010-034	110	120	30	M10
31,4	33,0	1DG010-029	110	150	25	M10
31,4	33,0	1DG010-027	120	195	30	M10
33,1	42,0	1DG010-037	100	140	25	M10
33,1	42,0	1DG010-042	100	140	32	M10
33,1	42,0	1DG010-040	110	140	30	M10
33,1	42,0	1DG010-055	120	140	25	M10
33,1	42,0	1DG010-041	120	140	32	M10
42,1	52,0	1DG010-046	80	115	25	M10
42,1	52,0	1DG010-053	110	156	25	M10
42,1	52,0	1DG010-051	110	156	30	M10
42,1	52,0	1DG010-050	110	156	35	M10
52,1	63,0	1DG010-063	110	156	25	M12
52,1	63,0	1DG010-065	110	156	30	M12
52,1	63,0	1DG010-062	110	156	35	M12

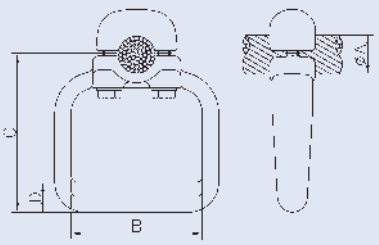

AL-Straight-Duplex-Connector

Conductor-Tube

Dim. of Conductor			Code	Technical Data of Connector						
ØA		ØB		Max. Current	Dim. of Connector				Bolt Dim.	
Min.	Max.				C	D	E	F	ØA	ØB
24,1	33,0	63,0	1FA010-025	1600	50	78	96	204	M10	M10
24,1	33,0	120,0	1FA010-030	1600	50	78	87	195	M12	M10
33,1	42,0	120,0	1FA020-125	2500	100	78	87	200	M12	M10
24,1	33,0	2“	1FA010-025	1600	50	78	96	204	M10	M10
24,1	33,0	4“	1FA010-030	1600	50	78	87	195	M12	M10
24,1	33,0	4,5“	1FA010-030	1600	50	78	87	195	M12	M10
33,1	42,0	4“	1FA020-125	2500	100	78	87	200	M12	M10
33,1	42,0	4,5“	1FA020-125	2500	100	78	87	200	M12	M10

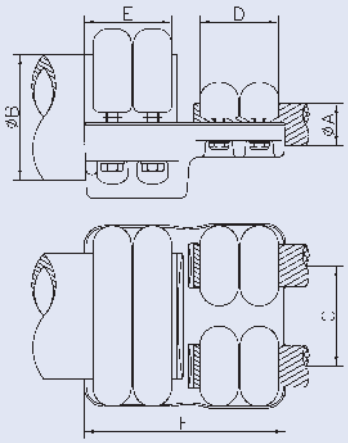

24,1	33,0	63,0	1FA010-048	2200	50	118	96	244	M10	M10
24,1	33,0	63,0	1FA010-067	2000	60	118	96	245	M10	M10
24,1	33,0	100,0	1FA010-027	2500	50	118	93	238	M12	M10
24,1	33,0	120,0	1FA010-031	2500	50	118	87	235	M12	M10
33,1	42,0	120,0	1FA015-018	3200	90	118	87	238	M12	M10
24,1	33,0	2“	1FA010-048	2200	50	118	96	244	M10	M10
24,1	33,0	2“	1FA010-067	2000	60	118	96	245	M10	M10
24,1	33,0	3,5“	1FA010-027	2500	50	118	93	238	M12	M10
24,1	33,0	4“	1FA010-031	2500	50	118	87	235	M12	M10
24,1	33,0	4,5“	1FA010-031	2500	50	118	87	235	M12	M10
33,1	42,0	4“	1FA015-018	3200	90	118	87	238	M12	M10
33,1	42,0	4,5“	1FA015-018	3200	90	118	87	238	M12	M10

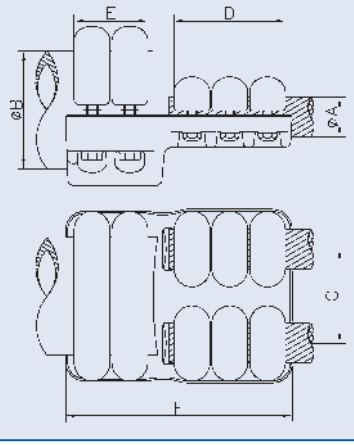

AL-Straight-Duplex-Connector

Tube-Conductor

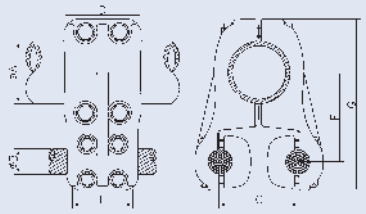

Dim. of Conductor			Code	Technical Data of Connector							
ØA	ØB			Max. Current	Dim. of Connector					Bolt Dim.	
	Min.	Max.			C	D	E	F	G	ØA	ØB
80,0	24,1	33,0	1FA115-005	1600	100	100	78	115	221	M12	M10
100,0	24,1	33,0	1FA110-023	1600	50	100	78	125	243	M12	M10
120,0	24,1	33,0	1FA110-027	1600	50	96	78	141	272	M12	M10
120,0	33,1	42,0	1FA115-011	2500	90	96	78	145	280	M12	M10
2,5“	24,1	33,0	1FA115-005	1600	100	100	78	115	221	M12	M10
3,5“	24,1	33,0	1FA110-023	1600	50	100	78	125	243	M12	M10
4“	24,1	33,0	1FA110-027	1600	50	96	78	141	272	M12	M10
4,5“	24,1	33,0	1FA110-027	1600	50	96	78	141	272	M12	M10
4“	33,1	42,0	1FA115-011	2500	90	96	78	145	280	M12	M10
4,5“	33,1	42,0	1FA115-011	2500	90	96	78	145	280	M12	M10

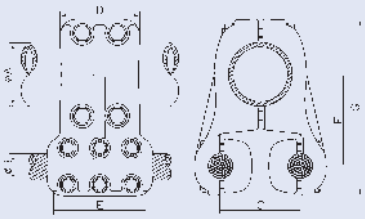

80,0	24,1	33,0	1FA110-019	2400	50	96	118	120	230	M12	M10
100,0	24,1	33,0	1FA110-025	2500	50	100	118	125	243	M12	M10
120,0	24,1	33,0	1FA115-120	2500	90	96	118	135	265	M12	M10
250,0	24,1	33,0	1FA110-250	2500	50	102	118	205	405	M12	M10
2,5“	24,1	33,0	1FA110-019	2400	50	96	118	120	230	M12	M10
3,5“	24,1	33,0	1FA110-025	2500	50	100	118	125	243	M12	M10
4“	24,1	33,0	1FA115-120	2500	90	96	118	135	265	M12	M10
4,5“	24,1	33,0	1FA115-120	2500	90	96	118	135	265	M12	M12

AL-Straight-Duplex-Terminal

Conductor-Stud

Dim. of Conductor			Code	Technical Data of Connector						
ØA		ØB		Max. Current	Dim. of Connector				Bolt Dim.	
Min.	Max.				C	D	E	F	ØA	ØB
24,1	33,0	30,0	1FA010-006	1250	50	78	85	190	M10	M10
24,1	33,0	30,0	1FA015-006	1600	100	78	85	201	M10	M10
24,1	33,0	40,0	1FA010-012	1600	50	78	95	198	M10	M10
24,1	33,0	40,0	1FA020-037	1600	100	78	95	210	M10	M10
24,1	33,0	50,0	1FA010-013	1600	50	78	95	198	M10	M10
24,1	33,0	50,0	1FA020-037	1600	100	78	95	210	M10	M10
24,1	33,0	60,0	1FA010-025	1600	50	78	96	204	M10	M10
42,1	52,0	30,0	1FA010-082	1400	90	86	85	205	M10	M10
42,1	52,0	40,0	1FA010-082	1400	90	86	85	205	M10	M10

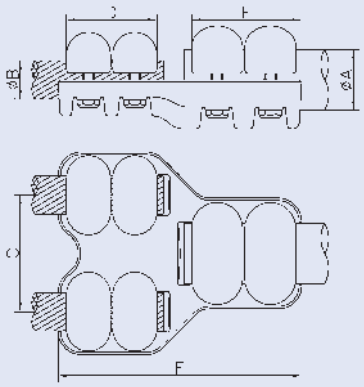

24,1	33,0	30,0	1FA010-007	1250	50	118	85	230	M10	M10
24,1	33,0	30,0	1FA010-020	1400	60	118	85	230	M10	M10
24,1	33,0	30,0	1FA015-012	2000	90	118	86	246	M10	M10
24,1	33,0	40,0	1FA010-020	1400	60	118	85	230	M10	M10
24,1	33,0	40,0	1FA015-012	2000	90	118	86	246	M10	M10
24,1	33,0	50,0	1FA010-048	2200	50	118	96	244	M10	M10
24,1	33,0	50,0	1FA010-011	1600	60	118	95	245	M10	M10
24,1	33,0	60,0	1FA010-048	2200	50	118	96	244	M10	M10
24,1	33,0	60,0	1FA010-067	2000	60	118	95	245	M10	M10

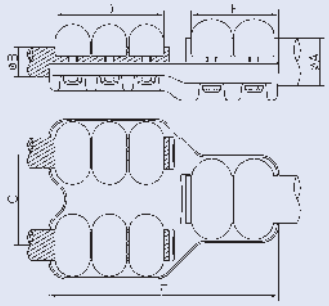

16,1	24,0	30,0	1FA130-009	1250	200	106	125	132	M10	M10
24,1	33,0	30,0	1FA010-018	1600	50	118	125	272	M10	M10
24,1	33,0	30,0	1FA010-023	1600	80	118	125	280	M10	M10
24,1	33,0	30,0	1FA020-034	2000	100	118	125	265	M10	M10
24,1	33,0	30,0	1FA130-033	2000	200	118	125	142	M10	M10
24,1	33,0	30,0	1FA130-056	1600	300	118	125	139	M10	M10
24,1	33,0	30,0	1FA130-055	1600	400	118	125	142	M10	M10
24,1	33,0	40,0	1FA010-018	1600	50	118	125	272	M10	M10
24,1	33,0	40,0	1FA010-023	1600	80	118	125	280	M10	M10
24,1	33,0	40,0	1FA020-034	2000	100	118	125	265	M10	M10
24,1	33,0	40,0	1FA130-033	2000	200	118	125	142	M10	M10
24,1	33,0	50,0	1FA010-050	2300	50	118	141	289	M10	M10
42,1	52,0	40,0	1FA010-083	2900	90	130	141	305	M10	M10
42,1	52,0	50,0	1FA010-083	2900	90	130	141	305	M10	M10

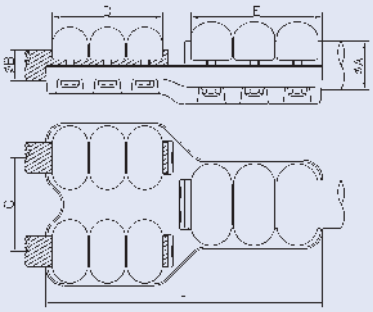

AL-Straight-Duplex-Flat Terminal

Conductor-Flat Terminal

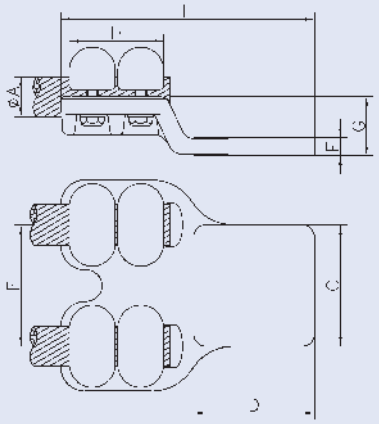

Dim. of Conductor				Code	Technical Data of Connector						
ØA		C	D		Max. Current	Dim. of Connector					Bolt Dim. ØA
Min.	Max.					E	F	G	H	L	
16,1	24,0	75	75	1GA020-006	1600	15	70	50	80	167	M10
16,1	24,0	80	80	1GA020-003	1600	20	70	45	70	172	M10
16,1	24,0	100	100	1GA020-009	1600	15	70	45	70	192	M10
16,1	24,0	125	125	1GA020-020	1600	15	100	65	70	221	M10
24,1	33,0	80	80	1GA010-003	1600	15	50	55	78	169	M10
24,1	33,0	80	80	1GA020-027	1600	15	100	50	78	190	M10
24,1	33,0	100	100	1GA010-006	1600	15	50	55	78	191	M10
24,1	33,0	100	100	1GA020-033	1600	15	100	50	78	210	M10
24,1	33,0	100	100	1GA030-009	2500	20	200	44	78	202	M10
24,1	33,0	130	130	1GA020-039	1600	15	100	50	78	240	M10
24,1	33,0	200	100	1GA010-016	2500	15	50	55	78	191	M10
24,1	33,0	200	100	1GA020-037	1600	15	100	50	78	210	M10
33,1	42,0	75	75	1GA020-124	2500	30	100	60	78	185	M10
33,1	42,0	100	100	1GA020-122	2500	20	100	50	78	210	M10
33,1	42,0	125	125	1GA020-145	2500	20	100	55	78	238	M10

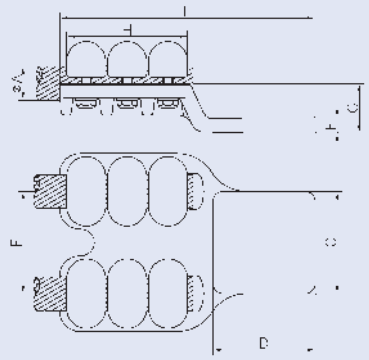

16,1	24,0	100	100	1GA030-002	2000	20	200	34	106	235	M10
24,1	33,0	60	60	1GA020-053	1250	25	80	55	118	206	M10
24,1	33,0	60	60	1GA020-464	1250	20	100	55	118	207	M10
24,1	33,0	80	80	1GA010-018	1600	20	45	60	118	209	M10
24,1	33,0	80	80	1GA020-056	1600	15	90	35	118	222	M10
24,1	33,0	80	80	1GA020-465	2000	20	100	55	118	227	M10
24,1	33,0	100	100	1GA010-027	2000	20	45	60	118	228	M10
24,1	33,0	100	100	1GA010-024	2000	20	50	60	118	229	M10
24,1	33,0	100	100	1GA020-063	2000	25	90	43	118	242	M10
24,1	33,0	100	100	1GA020-054	2000	20	100	55	118	247	M10
24,1	33,0	125	125	1GA010-033	2500	20	50	60	118	254	M10
24,1	33,0	125	125	1GA020-081	2500	25	90	43	118	267	M10
24,1	33,0	120	120	1GA020-114	2500	25	100	60	118	2621	M10
24,1	33,0	200	100	1GA010-026	2500	20	50	60	118	228	M10
24,1	33,0	200	100	1GA010-028	2500	20	80	65	118	240	M10
33,1	42,0	80	80	1GA030-022	2000	35	200	57	118	230	M10
33,1	42,0	100	100	1GA010-039	2000	25	60	71	118	229	M10
33,1	42,0	120	120	1GA010-042	3000	25	60	71	118	249	M10
33,1	42,0	200	100	1GA020-187	3200	25	100	55	118	245	M10
42,1	52,0	200	100	1GA010-047	2900	25	90	80	130	250	M10

AL-Straight-Duplex-Flat Terminal

Conductor-Flat Terminal

Dim. of Conductor				Code	Technical Data of Connector							
ØA		C	D		Max. Current	Dim. of Connector					Bolt Dim. ØA	Inst. Die No.
Min.	Max.					E	F	G	H	L		
26,1	26,9	100	100	1GA170-007	1800	20	100	45	105	235	M10	KZ 42
27,5	28,4	100	100	1GA170-008	1900	25	200	50	105	235	M10	KZ 42
31,7	32,6	100	100	1GA170-027	2000	25	200	50	160	290	M10	KZ 52
32,9	33,9	100	100	1GA170-010	3000	30	200	50	160	290	M10	KZ 52

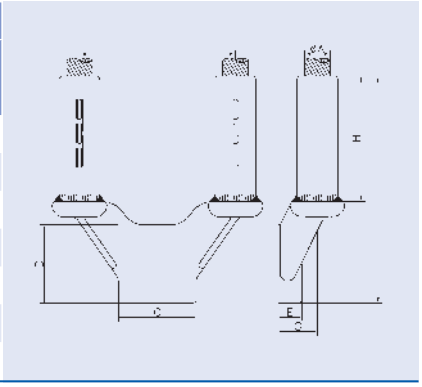

AL-Straight-Duplex-Flat Terminal

Conductor-Flat Terminal

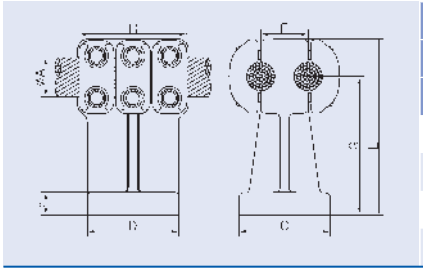

Dim. of Conductor				Code	Technical Data of Connector						
ØA		C	D		Max. Current	Dim. of Connector					Bolt Dim. ØA
Min.	Max.					E	F	G	H	L	
24,1	33,0	100	100	1GA230-004	2500	25	50	150	118	192	M10
24,1	33,0	100	100	1GA230-003	2500	25	100	150	118	192	M10
24,1	33,0	125	125	1GA230-005	2500	25	50	150	118	192	M10
24,1	33,0	200	100	1GA231-030	2500	25	200	150	118	185	M10

AL-Straight-Triplex-Flat Terminal

Conductor-Flat Terminal

Dim. of Conductor				Code	Technical Data of Connector						
ØA		C	D		Max. Current	Dim. of Connector					Bolt Dim. ØA
Min.	Max.					E	F	G	H	L	
24,1	33,0	100	100	1GA320-001	2500	25	100	60	118	258	M10
24,1	33,0	125	125	1GA320-002	3150	25	100	60	118	283	M10
24,1	33,0	200	100	1GA320-004	4000	25	100	60	118	258	M10
33,1	42,0	200	100	1GA320-101	4000	25	100	50	118	245	M10

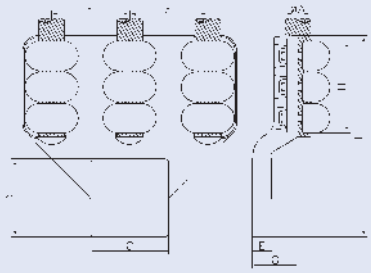

AL-Duplex-Suspension-Connector

Conductor

Figur 1

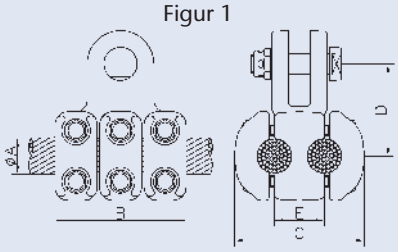

Figur 2

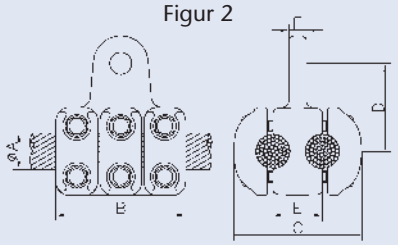

Dim. of Conductor ØA		Code	Technical Data of Connector							
			Dim. of Connector				Bolt	Suspension		
Min.	Max.		B	C	D	E	Dim. ØA	Bolt Dim.	Fig.	F
16,1	24,0	1SE240-030	106	268	40	200	M10	Ø19	1	
24,1	33,0	1SE100-032	118	116	83	45	M10	Ø19	1	
24,1	33,0	1SE100-030	118	116	83	45	M10	Ø22	1	
24,1	33,0	1SE100-035	144	121	90	52	M10	Ø22	1	
24,1	33,0	1SE100-034	118	149	90	80	M10	Ø19	1	
24,1	33,0	1SE100-033	118	170	83	100	M10	Ø19	1	
24,1	33,0	1SE240-031	136	280	40	200	M10	Ø22	1	
33,1	42,0	1SE100-076	136	171	85	90	M10	Ø19	1	
33,1	42,0	1SE240-040	78	284	75	200	M10	Ø22	1	
42,1	52,0	1SE100-050	130	180	100	90	M10	Ø19	1	

AL-Duplex-Parallel-Groove-Clamp

Conductor-Conductor

Dimension of Conductor				Code	Technical Data of Connector						
ØA		ØB			Max. Current	Dim. of Connector				Bolts	
Min.	Max.	Min.	Max.			C	D	E	F	Dim.	Pcs.
25,8	27,8	25,8	27,8	1PB100-044	1600	130	82	52	44	M10	3
36,1	39,0	36,1	39,0	1PB100-170	2000	150	115	62	62	M12	3
39,1	42,0	39,1	42,0	1PB100-130	3200	210	112	62	62	M14	5
42,1	44,0	42,1	44,0	1PB100-190	2500	152	138	72	72	M14	3

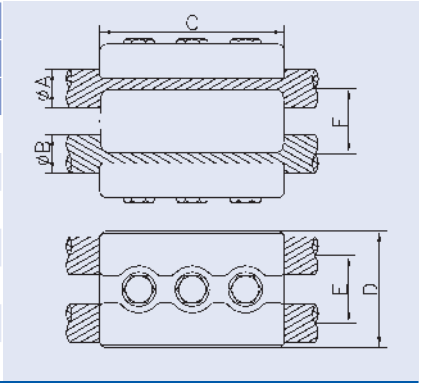

AL-T-Duplex-Connector

Conductor-Conductor

Dim. of Conductor				Code	Technical Data of Connector						
ØA		ØB			Max. Current	Dim. of Connector				Bolt Dim.	
Min.	Max.	Min.	Max.			C	D	E	F	ØA	ØB
16,1	24,0	33,1	42,0	1FB020-013	1400	100	78	78	142	M10	M10
24,1	33,0	24,1	33,0	1FB010-006	1250	50	78	78	181	M10	M10
24,1	33,0	24,1	33,0	1FB010-011	1250	80	78	78	179	M10	M10
24,1	33,0	24,1	33,0	1FB022-057	1200	200	78	70	106	M10	M10
24,1	33,0	33,1	42,0	1FB010-020	1400	50	78	78	186	M10	M10
24,1	33,0	33,1	42,0	1FB010-021	1400	62	78	78	186	M10	M10
24,1	33,0	33,1	42,0	1FB020-021	1200	100	78	70	136	M10	M10
24,1	33,0	42,1	50,0	1FB020-047	1250	100	78	90	187	M10	M10
24,1	33,0	42,1	50,0	1FB022-114	2000	200	78	95	162	M10	M10
33,1	42,0	24,1	33,0	1FB010-032	1250	62	78	78	186	M10	M10
33,1	42,0	24,1	33,0	1FB022-045	1250	200	78	78	106	M10	M10
33,1	42,0	33,1	42,0	1FB022-082	1400	200	78	78	121	M10	M10
33,1	42,0	33,1	42,0	1FB027-055	1400	400	78	78	118	M10	M10
33,1	42,0	52,1	63,0	1FB020-055	2500	100	78	90	196	M10	M10

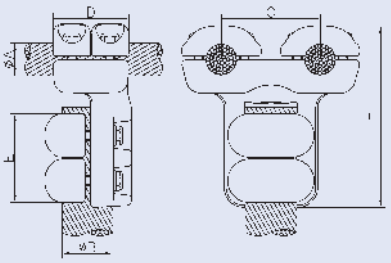

16,1	24,0	33,1	42,0	1FB027-006	1600	300	70	118	154	M10	M10
24,1	33,0	24,1	33,0	1FB010-018	1600	50	78	118	221	M10	M10
24,1	33,0	24,1	33,0	1FB020-027	1250	100	78	118	206	M10	M10
24,1	33,0	24,1	33,0	1FB022-039	1600	200	78	118	158	M10	M10
24,1	33,0	33,1	42,0	1FB010-059	1600	50	78	118	226	M10	M10
24,1	33,0	33,1	42,0	1FB020-042	1600	100	78	118	202	M10	M10
24,1	33,0	33,1	42,0	1FB027-039	1600	400	78	118	158	M10	M10
24,1	33,0	42,1	50,0	1FB022-117	2500	200	78	136	207	M10	M10
33,1	42,0	24,1	33,0	1FB020-060	1400	100	78	118	220	M10	M10
33,1	42,0	33,1	42,0	1FB020-065	2000	90	78	118	180	M10	M10
33,1	42,0	33,1	42,0	1FB022-103	2000	200	78	118	159	M10	M10
33,1	42,0	33,1	42,0	1FB027-046	2000	400	78	118	162	M10	M10

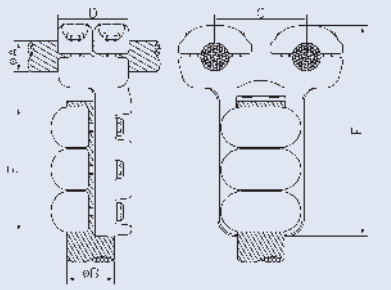

24,1	33,0	24,1	33,0	1FB010-009	1250	45	118	78	181	M10	M10
24,1	33,0	33,1	42,0	1FB020-045	1500	100	118	78	164	M10	M10
24,1	33,0	52,1	63,0	1FB020-054	2200	100	118	90	178	M10	M10
33,1	42,0	42,1	50,0	1FB022-119	1700	200	118	90	124	M10	M10

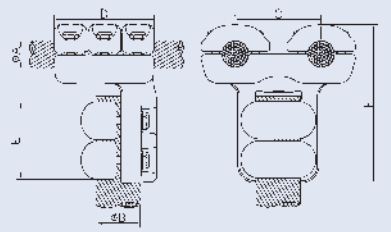

AL-T-Duplex-Connector

Conductor-Conductor

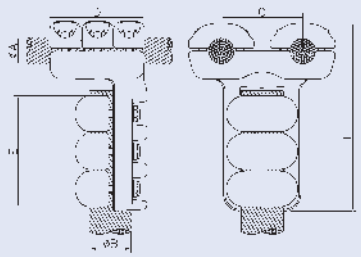

Dim. of Conductor				Code	Technical Data of Connector						
ØA		ØB			Max. Current	Dim. of Connector				Bolt Dim.	
Min.	Max.	Min.	Max.			C	D	E	F	ØA	ØB
16,1	24,0	33,1	42,0	1FB022-072	1600	200	106	118	155	M10	M10
16,1	24,0	33,1	42,0	1FB027-004	2000	300	106	118	156	M10	M10
24,1	33,0	24,1	33,0	1FB010-012	1600	45	118	118	221	M10	M10
24,1	33,0	24,1	33,0	1FB020-036	1400	100	118	118	206	M10	M10
24,1	33,0	24,1	33,0	1FB022-066	1400	200	118	118	173	M10	M10
24,1	33,0	33,1	42,0	1FB010-100	2000	60	118	118	217	M10	M10
24,1	33,0	33,1	42,0	1FB010-101	2000	80	118	118	217	M10	M10
24,1	33,0	33,1	42,0	1FB020-048	2000	100	118	118	202	M10	M10
24,1	33,0	33,1	42,0	1FB022-078	2000	200	118	118	178	M10	M10
24,1	33,0	42,1	52,0	1FB027-088	2500	400	118	130	171	M10	M10
24,1	33,0	52,1	63,0	1FB022-130	2800	200	118	160	201	M10	M10
33,1	42,0	24,1	33,0	1FB020-063	1600	90	118	118	218	M10	M10
33,1	42,0	24,1	33,0	1FB027-047	1400	400	118	118	159	M10	M10
33,1	42,0	33,1	42,0	1FB022-090	2000	200	118	118	159	M10	M10
33,1	42,0	52,1	63,0	1FB010-160	2900	60	118	136	245	M10	M10
42,1	52,0	33,1	42,0	1FB022-126	2000	200	136	118	164	M10	M10
42,1	52,0	42,1	50,0	1FB020-088	2500	100	136	130	201	M10	M10
42,1	52,0	42,1	50,0	1FB022-551	2500	200	136	130	166	M10	M10

AL-T-Duplex-Connector

Conductor-Conductor

Dim. of Conductor				Code	Technical Data of Connector							
ØA		ØB			Max. Current	Dim. of Connector					Bolt Dim.	
Min.	Max.	Min.	Max.			C	D	E	F	G	ØA	ØB
24,1	33,0	24,1	33,0	1FB210-018	2500	50	50	118	118	216	M10	M10
24,1	33,0	24,1	33,0	1FB215-015	2500	100	100	118	118	210	M10	M10
24,1	31,6	24,1	33,0	1FB215-069	2500	200	200	118	118	203	M10	M10
31,7	33,0	24,1	31,6	1FB215-069	2500	200	200	118	118	203	M10	M10
31,7	33,0	31,7	33,0	1FB215-075	2500	200	200	118	118	203	M10	M10
31,7	33,0	31,7	33,0	1FB215-095	2500	400	400	118	118	203	M10	M10
33,1	42,0	33,1	42,0	1FB215-036	3200	100	100	118	118	222	M10	M10
33,1	42,0	33,1	42,0	1FB215-076	3000	200	200	118	118	219	M10	M10

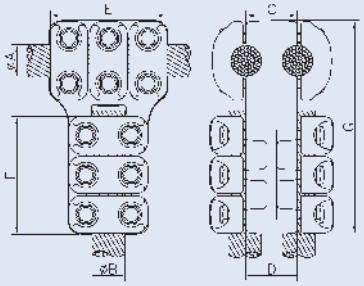

24,1	33,0	24,1	33,0	1FB230-008	2500	100	50	118	118	199	M10	M10
24,1	33,0	24,1	33,0	1FB230-010	2500	200	50	118	118	199	M10	M10
24,1	33,0	24,1	33,0	1FB220-012	2500	200	80	118	118	166	M10	M10
24,1	33,0	24,1	33,0	1FB220-009	1400	200	100	118	118	209	M10	M10
24,1	33,0	24,1	33,0	1FB220-019	2500	400	100	118	118	185	M10	M10
24,1	33,0	33,1	42,0	1FB230-007	2500	100	60	118	118	199	M10	M10
24,1	33,0	33,1	42,0	1FB230-030	2500	200	60	118	118	195	M10	M10
33,1	42,0	24,1	33,0	1FB230-038	2000	100	50	118	118	215	M10	M10
33,1	42,0	24,1	33,0	1FB230-040	2500	400	50	118	118	195	M10	M10
33,1	42,0	33,1	42,0	1FB230-042	3200	100	60	118	118	209	M10	M10

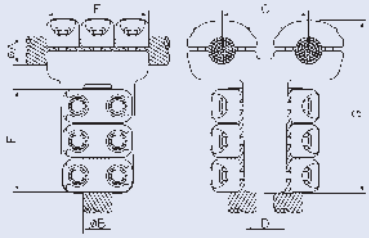

24,1	33,0	24,1	33,0	1FB260-011	2500	50	50	118	118	220	M10	M10
24,1	33,0	24,1	33,0	1FB260-008	2500	100	50	118	118	199	M10	M10
24,1	33,0	24,1	33,0	1FB260-012	2500	200	50	118	118	173	M10	M10
24,1	33,0	24,1	33,0	1FB260-013	2500	200	80	118	118	173	M10	M10
24,1	33,0	24,1	33,0	1FB260-014	3200	200	100	118	118	173	M10	M10
24,1	33,0	24,1	33,0	1FB260-019	2500	400	50	118	118	159	M10	M10
24,1	33,0	24,1	33,0	1FB265-400	2500	400	90	118	118	159	M10	M10
24,1	33,0	33,1	42,0	1FB260-010	2500	100	60	118	118	199	M10	M10
33,1	42,0	33,1	42,0	1FB265-009	3200	90	90	118	118	204	M10	M10
33,1	42,0	33,1	42,0	1FB265-042	3200	140	100	118	118	204	M10	M10
33,1	42,0	33,1	42,0	1FB260-025	4000	200	50	118	118	204	M10	M10
42,1	44,0	24,1	33,0	1FB260-043	2500	100	50	131	118	216	M10	M10

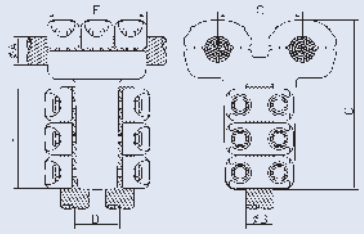

AL-T-Duplex-Connector

Tube-Conductor

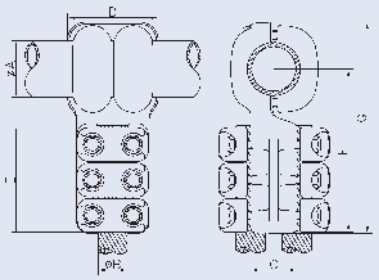

Dim. of Conductor			Code	Technical Data of Connector							
ØA	ØB			Max. Current	Dim. of Connector					Bolt Dim.	
	Min.	Max.			C	D	E	F	G	ØA	ØB
63,0	24,1	33,0	1FB080-010	2500	50	102	118	185	238	M10	M10
63,0	52,1	63,0	1FB090-043	3200	200	102	136	212	269	M12	M10
80,0	24,1	33,0	1FB080-081	2400	50	96	118	209	278	M12	M10
80,0	33,1	42,0	1FB080-065	2400	60	69	118	210	279	M12	M10
100,0	24,1	33,0	1FB080-018	2500	50	98	118	216	293	M12	M10
100,0	24,1	33,0	1FB090-036	2400	90	88	118	212	287	M12	M10
100,0	24,1	33,0	1FB090-065	3200	200	100	118	205	282	M12	M10
140,0	24,1	33,0	1FB080-160	2500	50	102	118	253	364	M12	M10
150,0	24,1	33,0	1FB080-160	2500	50	102	118	253	364	M12	M10
160,0	24,1	33,0	1FB080-160	2500	50	102	118	253	364	M12	M10
250,0	24,1	33,0	1FB080-250	2500	50	102	118	300	160	M12	M10
1,5“	52,1	63,0	1FB090-043	3200	200	102	136	212	269	M12	M10
2“	24,1	33,0	1FB080-010	2500	50	102	118	185	238	M10	M10
2“	52,1	63,0	1FB090-043	3200	200	102	136	212	269	M12	M10
2,5“	24,1	33,0	1FB080-081	2400	50	96	118	209	278	M12	M10
2,5“	33,1	42,0	1FB080-065	2400	60	69	118	210	279	M12	M10
3,5“	24,1	33,0	1FB080-018	2500	50	98	118	216	293	M12	M10
3,5“	24,1	33,0	1FB090-036	2400	90	88	118	212	287	M12	M10
3,5“	24,1	33,0	1FB090-065	3200	200	100	118	205	282	M12	M10
5“	24,1	33,0	1FB080-160	2500	50	102	118	253	364	M12	M10

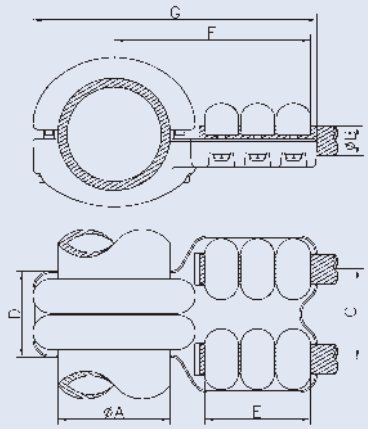

80,0	24,1	33,0	1FB140-010	2400	50	106	118	205	278	M12	M10
100,0	24,1	33,0	1FB140-012	2500	50	106	118	210	290	M12	M10
120,0	24,1	33,0	1FB140-120	2400	50	98	118	226	319	M12	M10
120,0	24,1	33,0	1FB150-033	2800	100	96	118	225	315	M12	M10
140,0	24,1	33,0	1FB140-160	2500	50	116	118	245	360	M12	M10
150,0	24,1	33,0	1FB140-160	2500	50	116	118	245	360	M12	M10
160,0	24,1	33,0	1FB140-160	2500	50	116	118	245	360	M12	M10
250,0	24,1	33,0	1FB140-251	2500	50	116	118	296	458	M12	M10
2,5“	24,1	33,0	1FB140-010	2400	50	106	118	205	278	M12	M10
3,5“	24,1	33,0	1FB140-012	2500	50	106	118	210	290	M12	M10
4“	24,1	33,0	1FB140-120	2400	50	98	118	226	319	M12	M10
4“	24,1	33,0	1FB150-033	2800	100	96	118	225	315	M12	M10
4,5“	24,1	33,0	1FB140-120	2400	50	98	118	226	319	M12	M10
4,5“	24,1	33,0	1FB150-033	2800	100	96	118	225	315	M12	M10
5“	24,1	33,0	1FB140-160	2500	50	116	118	245	360	M12	M10

AL-T-Duplex-Connector

Conductor-Stud

Dim. of Conductor			Code	Technical Data of Connector							
ØA		ØB		Max. Current	Dim. of Connector					Bolt Dim.	
Min.	Max.				C	D	E	F	G	ØA	ØB
16,1	24,0	30,0	1FB020-013	1400	100	78	78	105	142	M10	M10
16,1	24,0	40,0	1FB020-013	1400	100	78	78	105	142	M10	M10
24,1	33,0	30,0	1FB010-006	1250	50	78	78	141	181	M10	M10
24,1	33,0	30,0	1FB010-021	1400	62	78	78	145	186	M10	M10
24,1	33,0	30,0	1FB010-011	1250	80	78	78	138	179	M10	M10
24,1	33,0	30,0	1FB020-021	1200	100	78	70	100	136	M10	M10
24,1	33,0	30,0	1FB022-057	1200	200	78	70	70	106	M10	M10
24,1	33,0	40,0	1FB010-020	1400	50	78	78	137	186	M10	M10
24,1	33,0	40,0	1FB010-021	1400	62	78	78	145	186	M10	M10
24,1	33,0	40,0	1FB020-047	1250	100	78	90	150	187	M10	M10
24,1	33,0	40,0	1FB022-114	2000	200	78	95	126	162	M10	M10
24,1	33,0	50,0	1FB020-047	1250	100	78	90	150	187	M10	M10
24,1	33,0	50,0	1FB022-114	2000	200	78	95	126	162	M10	M10
33,1	42,0	30,0	1FB010-032	1250	62	78	78	141	186	M10	M10
33,1	42,0	30,0	1FB022-045	1250	200	78	78	70	106	M10	M10
33,1	42,0	30,0	1FB027-055	1400	400	78	78	78	118	M10	M10
33,1	42,0	40,0	1FB022-082	1400	200	78	78	78	121	M10	M10
33,1	42,0	40,0	1FB027-055	1400	400	78	78	78	118	M10	M10
33,1	42,0	50,0	1FB020-055	2500	100	78	90	155	196	M10	M10
33,1	42,0	60,0	1FB020-055	2500	100	78	90	155	196	M10	M10

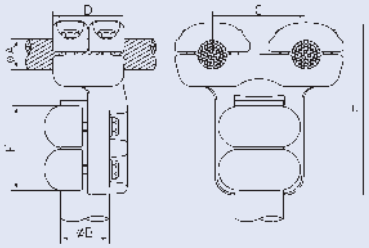

16,1	24,0	30,0	1FB027-006	1600	300	70	118	118	154	M10	M10
16,1	24,0	40,0	1FB027-006	1600	300	70	118	118	154	M10	M10
24,1	33,0	30,0	1FB010-018	1600	50	78	118	181	221	M10	M10
24,1	33,0	30,0	1FB085-013	1600	80	78	118	130	168	M10	M10
24,1	33,0	30,0	1FB085-012	1600	90	78	118	130	168	M10	M10
24,1	33,0	30,0	1FB020-027	1250	100	78	118	170	206	M10	M10
24,1	33,0	30,0	1FB022-039	1600	200	78	118	118	158	M10	M10
24,1	33,0	30,0	1FB027-039	1600	400	78	118	118	158	M10	M10
24,1	33,0	40,0	1FB010-059	1600	50	78	118	185	226	M10	M10
24,1	33,0	40,0	1FB020-042	1600	100	78	118	165	202	M10	M10
24,1	33,0	40,0	1FB022-117	2500	200	78	136	172	207	M10	M10
24,1	33,0	40,0	1FB027-039	1600	400	78	118	118	158	M10	M10
24,1	33,0	50,0	1FB022-117	2500	200	78	136	172	207	M10	M10
33,1	42,0	30,0	1FB085-030	1250	90	78	118	130	163	M10	M10
33,1	42,0	30,0	1FB020-060	1400	100	78	118	180	220	M10	M10
33,1	42,0	30,0	1FB022-103	2000	200	78	118	118	159	M10	M10

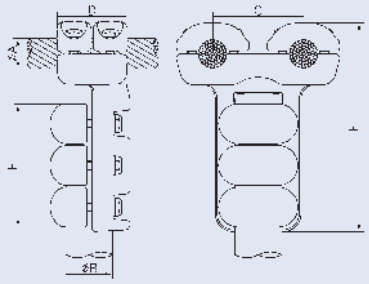

AL-T-Duplex-Connector

Conductor-Stud

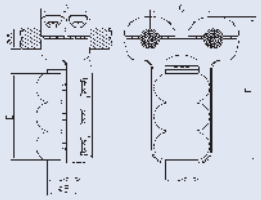

Dim. of Conductor			Code	Technical Data of Connector							
ØA		ØB		Max. Current	Dim. of Connector					Bolt Dim.	
Min.	Max.				C	D	E	F	G	ØA	ØB
33,1	42,0	40,0	1FB020-065	2000	90	78	118	140	180	M10	M10
33,1	42,0	40,0	1FB020-103	3200	200	78	118	197	238	M10	M10
33,1	42,0	40,0	1FB027-046	2000	400	78	118	121	162	M10	M10

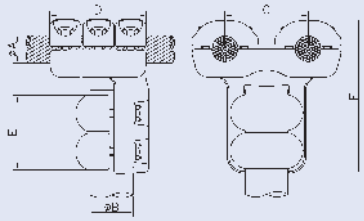

24,1	33,0	30,0	1FB010-009	1250	45	118	78	141	181	M10	M10
24,1	33,0	30,0	1FB020-045	1500	100	118	78	125	164	M10	M10
24,1	33,0	40,0	1FB020-045	1500	100	118	78	125	164	M10	M10
24,1	33,0	50,0	1FB080-010	2500	50	118	102	185	238	M10	M10
24,1	33,0	50,0	1FB020-054	2200	100	118	90	140	178	M10	M10
24,1	33,0	60,0	1FB080-010	2500	50	118	102	185	238	M10	M10
24,1	33,0	60,0	1FB020-054	2200	100	118	90	140	178	M10	M10
33,1	42,0	40,0	1FB022-119	1700	200	118	90	86	124	M10	M10
33,1	42,0	50,0	1FB022-119	1700	200	118	90	86	124	M10	M10

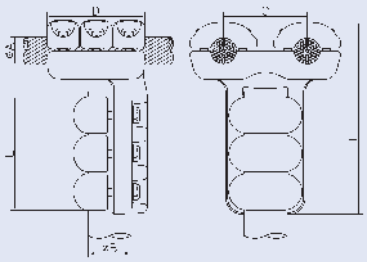

16,1	24,0	30,0	1FB022-072	1600	200	106	118	118	155	M10	M10
16,1	24,0	30,0	1FB027-004	2000	300	106	118	118	156	M10	M10
16,1	24,0	40,0	1FB022-072	1600	200	106	118	118	155	M10	M10
16,1	24,0	40,0	1FB027-004	2000	300	106	118	118	156	M10	M10
24,1	33,0	30,0	1FB010-012	1600	45	118	118	181	221	M10	M10
24,1	33,0	30,0	1FB010-100	2000	60	118	118	177	217	M10	M10
24,1	33,0	30,0	1FB010-101	2000	80	118	118	177	217	M10	M10
24,1	33,0	30,0	1FB020-036	1400	100	118	118	170	206	M10	M10
24,1	33,0	30,0	1FB022-066	1400	200	118	118	137	173	M10	M10
24,1	33,0	40,0	1FB010-100	2000	60	118	118	177	217	M10	M10
24,1	33,0	40,0	1FB010-101	2000	80	118	118	177	217	M10	M10
24,1	33,0	40,0	1FB020-048	2000	100	118	118	165	202	M10	M10
24,1	33,0	40,0	1FB022-078	2000	200	118	118	136	178	M10	M10
24,1	33,0	50,0	1FB022-130	2800	200	118	160	200	201	M10	M10
24,1	33,0	50,0	1FB027-088	2500	400	118	130	132	171	M10	M10
24,1	33,0	60,0	1FB022-130	2800	200	118	160	200	201	M10	M10
33,1	42,0	30,0	1FB020-063	1600	90	118	118	178	218	M10	M10
33,1	42,0	30,0	1FB085-035	1600	150	118	118	180	217	M10	M10
33,1	42,0	30,0	1FB022-090	2000	200	118	118	120	159	M10	M10
33,1	42,0	30,0	1FB027-047	1400	400	118	118	120	159	M10	M10
33,1	42,0	40,0	1FB022-090	2000	200	118	118	120	159	M10	M10
33,1	42,0	50,0	1FB010-160	2900	60	118	136	200	245	M10	M10
33,1	42,0	60,0	1FB010-160	2900	60	118	136	200	245	M10	M10

AL-T-Duplex-Connector

Conductor-Stud

Dim. of Conductor			Code	Technical Data of Connector							
ØA		ØB		Max. Current	Dim. of Connector					Bolt Dim.	
Min.	Max.				C	D	E	F	G	ØA	ØB
42,1	52,0	30,0	1FB022-126	2000	200	136	118	120	164	M10	M10
42,1	52,0	40,0	1FB020-088	2500	100	136	130	157	201	M10	M10
42,1	52,0	40,0	1FB022-126	2000	200	136	118	120	164	M10	M10
42,1	52,0	50,0	1FB020-088	2500	100	136	130	157	201	M10	M10
42,1	52,0	50,0	1FB022-551	2500	200	136	130	130	166	M10	M10

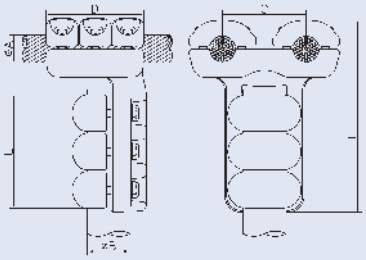

AL-T-Duplex-Terminal

Stud-Conductor

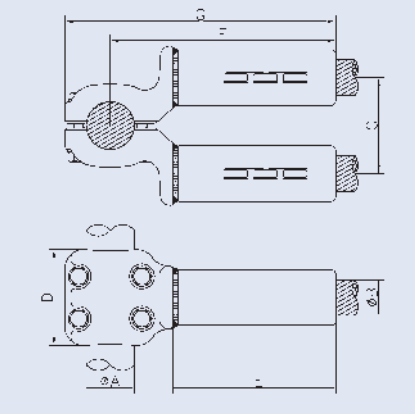

Dim. of Cond.			Code	Technical Data of Connector							
ØA	ØB			Max. Current	Dim. Connector					Bolt Dim. ØA	Inst. Die No.
	Min.	Max.			C	D	E	F	G		
40,0	36,1	37,1	1FB100-007	2500	100	100	170	235	283	M10	KZ 58
50,0	32,9	33,9	1FB101-004	3000	200	100	160	170	218	M10	KZ 52
50,0	36,1	37,1	1FB100-007	2500	100	100	170	235	283	M10	KZ 58
50,0	36,1	37,1	1FB100-010	2700	200	102	170	248	305	M10	KZ 58
60,0	36,1	37,1	1FB100-010	2700	200	102	170	248	305	M10	KZ 58

AL-T-Duplex-Flat Terminal

Conductor-Flat Terminal

Dim. of Conductor				Code	Technical Data of Connector						
ØA		C	D		Max. Current	Dim. of Connector					Bolt Dim. ØA
Min.	Max.					E	F	G	H	L	
24,1	33,0	60	60	1GB110-200	1250	16	50	78	117	157	M10
24,1	33,0	75	75	1GB110-205	1600	15	50	78	132	172	M10
24,1	33,0	80	80	1GB120-005	1600	20	100	78	126	163	M10
42,1	52,0	80	80	1GB110-250	2000	25	80	86	145	196	M10

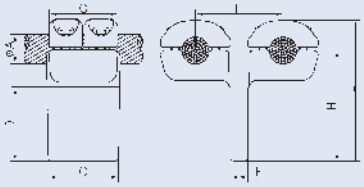

24,1	33,0	80	80	1GB110-070	1400	20	45	118	118	178	M10
24,1	33,0	100	100	1GB110-075	1400	20	50	118	138	198	M10
24,1	33,0	100	100	1GB120-016	2500	25	200	118	142	181	M10
33,1	42,0	100	100	1GB110-213	2500	25	60	118	158	203	M10

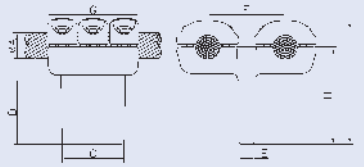

AL-T-Duplex-Suspension-Commector

Conductor-Conductor

Figur 1

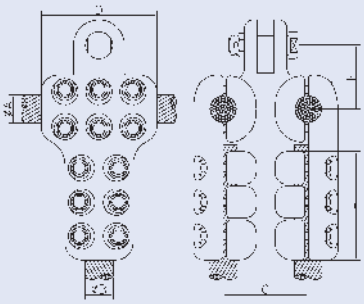

Figur 2

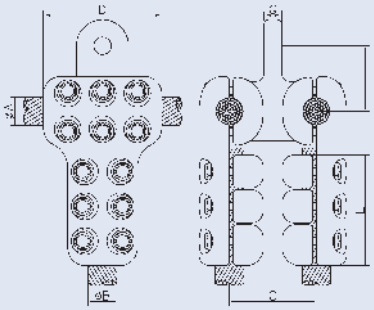

Dim. of Conductor				Code	Technical Data of Connector									
ØA		ØB			Max. Curr.	Dim. Connector				Bolt Dim.		Suspension		
Min.	Max.	Min.	Max.			C	D	E	F	ØA	ØB	Bolt Dim.	Fig.	F
24,1	33,0	24,1	33,0	1SF200-045	2500	45	118	118	74	M10	M10	Ø19	1	
24,1	33,0	24,1	33,0	1SF250-033	1400	100	118	118	75	M10	M10	Ø19	1	
24,1	33,0	24,1	33,0	1SF250-200	1400	200	118	118	75	M10	M10	Ø19	1	
24,1	33,0	24,1	33,0	1SF200-047	2500	45	118	118	74	M10	M10	Ø22	1	
24,1	33,0	24,1	33,0	1SF250-035	1400	200	118	118	75	M10	M10	Ø22	1	
24,1	33,0	24,1	33,0	1SF220-028	2500	45	118	118	80	M10	M10	Ø19	2	19
33,1	42,0	33,1	42,0	1SF250-041	2500	90	118	118	80	M10	M10	Ø19	1	
33,1	42,0	33,1	42,0	1SF250-043	2500	100	118	118	80	M10	M10	Ø19	1	
33,1	42,0	33,1	42,0	1SF250-044	2500	100	118	118	80	M10	M10	Ø22	1	

AL-90°-Duplex-Flat Terminal

Conductor-Flat Terminal

Dim. of Conductor				Code	Technical Data of Connector						
ØA		C	D		Max. Current	Dim. of Connector					Bolt Dim.
Min.	Max.					E	F	G	H	L	ØA
16,1	24,0	80	80	1GD020-030	1600	15	70	70	116	151	M10
24,1	33,0	75	75	1GD010-030	1600	20	50	78	137	177	M10
24,1	33,0	80	80	1GD020-180	1600	15	100	78	120	159	M10
24,1	33,0	100	100	1GD010-035	1600	20	50	78	162	203	M10
24,1	33,0	100	100	1GD020-181	1600	15	100	78	140	179	M10
33,1	42,0	100	100	1GD020-040	2500	20	100	78	150	189	M10
33,1	42,0	200	100	1GD020-042	2500	20	100	78	150	189	M10

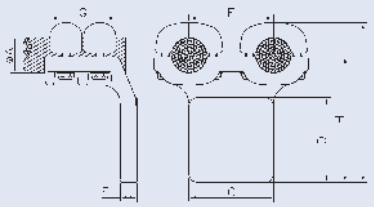

16,1	24,0	100	100	1GD020-024	1000	15	100	106	123	160	M10
24,1	33,0	100	100	1GD010-055	2000	20	45	118	162	203	M10
24,1	33,0	100	100	1GD010-052	2000	20	50	118	165	205	M10
24,1	33,0	125	125	1GD010-053	2500	20	50	118	190	230	M10
24,1	33,0	200	100	1GD010-056	2500	20	50	118	165	205	M10
24,1	33,0	200	100	1GD030-101	2400	30	200	118	150	191	M10
33,1	42,0	100	100	1GD010-081	2000	25	60	118	170	215	M10
33,1	42,0	100	100	1GD030-098	3150	35	200	118	119	158	M10
33,1	42,0	120	120	1GD010-080	3000	25	60	118	190	235	M10
42,1	52,0	200	100	1GD010-046	2900	25	90	130	180	237	M10

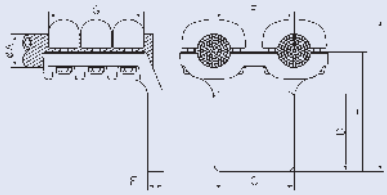

AL-90°-Duplex-Flat Terminal

Conductor-Flat Terminal

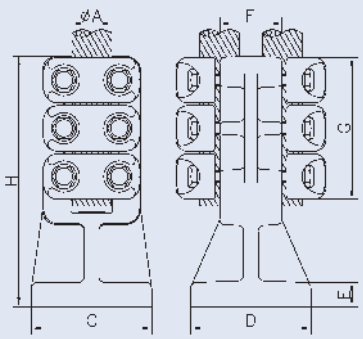

Dim. of Conductor				Code	Technical Data of Connector					
ØA		C	D		Max. Current	Dim. of Connector				Bolt Dim.
Min.	Max.					E	F	G	H	ØA
24,1	33,0	100	100	1GD125-030	2500	20	50	118	208	M10
33,1	42,0	100	100	1GD125-039	2000	20	50	118	208	M10
33,1	42,0	200	100	1GD125-040	2500	20	60	118	210	M10

AL-90°-Duplex-Flat Terminal

Conductor-Flat Terminal

Dim. of Conductor				Code	Technical Data of Connector							
ØA		C	D		Max. Current	Dim. of Connector					Bolt Dim. ØA	Inst. Die No.
Min.	Max.					E	F	G	H	L		
26,1	26,9	100	100	1GD170-025	1800	20	100	105	135	168	M10	KZ 42
29,1	29,9	100	100	1GD170-030	2000	20	100	160	135	168	M10	KZ 52
30,0	30,9	100	100	1GD170-031	2000	20	100	160	135	168	M10	KZ 52
31,9	32,8	100	100	1GD170-020	2000	25	200	160	135	168	M10	KZ 52

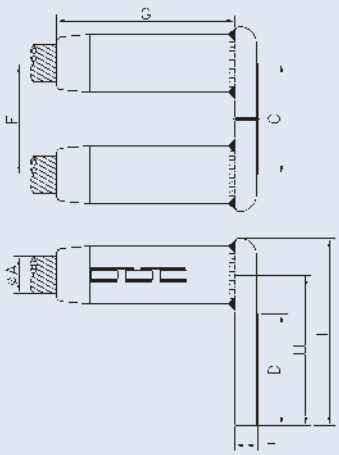

AL-Angle-Duplex-Terminal

Conductor-Stud

Dim. of Conductor			Code	Technical Data of Connector							
ØA		ØB		Max. Current	Dim. of Connector					Bolt Dim.	
Min.	Max.				C	D	E	F	α	ØA	ØB
24,1	33,0	30,0	1FC010-040	1400	45	118	85	243	45°	M10	M10
24,1	33,0	30,0	1FC010-055	1400	50	130	85	295	45°	M10	M10
24,1	33,0	40,0	1FC010-040	1400	45	118	85	243	45°	M10	M10
24,1	33,0	40,0	1FC010-055	1400	50	130	85	295	45°	M10	M10
24,1	33,0	40,0	1FC020-055	1800	100	118	95	204	45°	M10	M10
24,1	33,0	50,0	1FC020-055	1800	100	118	95	204	45°	M10	M10
24,1	33,0	60,0	1FC020-080	1800	100	118	96	233	45°	M10	M10

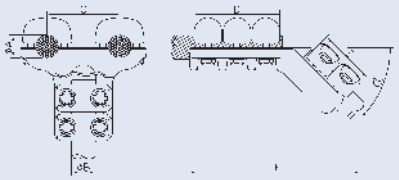

16,1	24,0	30,0	1FC030-020	1600	200	106	118	235	45°	M10	M10
24,1	33,0	30,0	1FC010-150	2000	60	118	106	250	45°	M10	M10
24,1	33,0	30,0	1FC020-038	2000	90	118	118	239	45°	M10	M10
24,1	33,0	30,0	1FC020-100	1600	100	118	118	240	45°	M10	M10
24,1	33,0	40,0	1FC010-150	2000	60	118	106	250	45°	M10	M10
24,1	33,0	40,0	1FC020-038	2000	90	118	118	239	45°	M10	M10
24,1	33,0	40,0	1FC020-065	2500	100	118	142	236	45°	M10	M10
24,1	33,0	40,0	1FC030-049	2000	200	118	142	239	45°	M10	M10
24,1	33,0	50,0	1FC010-180	2500	60	118	142	278	45°	M10	M10
24,1	33,0	50,0	1FC020-065	2500	100	118	142	236	45°	M10	M10
24,1	33,0	50,0	1FC030-049	2000	200	118	142	239	45°	M10	M10
24,1	33,0	60,0	1FC010-180	2500	60	118	142	278	45°	M10	M10

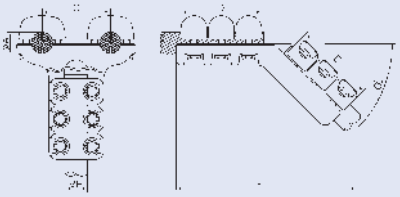

AL-Angle-Duplex-Flat Terminal

Conductor-Flat Terminal

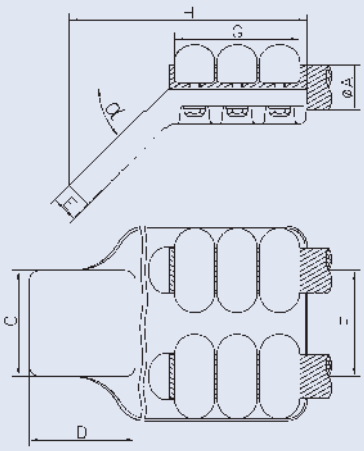

Dim. of Conductor				Code	Technical Data of Connector						
ØA		C	D		Max. Current	Dim. of Connector					Bolt Dim.
Min.	Max.					E	F	G	H	α	ØA
24,1	33,0	60	60	1GC020-124	1600	25	100	118	170	45°	M10
24,1	33,0	80	80	1GC010-050	1600	15	50	118	209	45°	M10
24,1	33,0	80	80	1GC020-145	2000	25	100	118	200	45°	M10
24,1	33,0	100	100	1GC010-045	2000	20	45	118	196	45°	M10
24,1	33,0	100	100	1GC010-051	2000	20	50	118	204	45°	M10
24,1	33,0	100	100	1GC020-150	2000	20	100	118	196	45°	M10
24,1	33,0	120	120	1GC010-053	2500	25	60	118	215	45°	M10
24,1	33,0	200	100	1GC010-054	2500	20	50	118	210	45°	M10
24,1	33,0	200	100	1GC020-173	2800	20	90	118	220	45°	M10
24,1	33,0	200	100	1GC020-175	2200	20	100	118	205	45°	M10
33,1	42,0	100	100	1GC010-030	2500	25	60	118	204	45°	M10
33,1	42,0	100	100	1GC020-188	2500	25	200	118	235	45°	M10
33,1	42,0	125	125	1GC020-185	2500	25	200	118	235	45°	M10
33,1	42,0	200	100	1GC020-187	3200	25	100	118	224	45°	M10

AL-Duplex-Support

Conductor

Dim. of Conductor		Code	Technical Data of Support									
			B	E	Bolt Dim.	Baseplate						
						Dimension			Drillingplan			
ØA												
Min.	Max.				ØA	ØC	ØD	F	Pcs.	ØG	±α	β
20,1	23,6	1HC005-033	50	70	M10	120	145	6	4	14		45°
20,1	23,6	1HC005-031	50	75	M10	127	160	6	8	18		
20,1	23,6	1HC005-020	100	70	M10	76	100	6	4	14		45°
20,1	23,6	1HC005-024	100	75	M10	120	145	6	4	14		45°
20,1	23,6	1HC005-035	100	75	M10	127	160	10	4	18	5°	
20,1	23,6	1HC005-021	100	75	M10	127	160	6	8	18		
20,1	23,6	1HC005-034	100	75	M10	225	260	10	4	18	5°	
25,8	28,1	1HC005-053	52	75	M10	120	160	6	4	14		45°
25,8	28,1	1HC005-050	52	75	M10	127	160	6	4	18		
25,8	28,1	1HC005-052	52	75	M10	127	160	6	8	18		
25,8	28,1	1HC005-051	52	85	M10	127	160	6	4	18		
25,8	28,1	1HC005-060	52	75	M10	225	260	6	4	18		
28,2	29,5	1HC005-065	50	72	M10	127	160	6	8	18		
28,2	29,5	1HC005-068	100	75	M10	66	100	6	4	12		45°
28,2	29,5	1HC005-067	100	75	M10	76	100	6	4	14		45°
28,2	29,5	1HC005-036	100	75	M10	127	160	8	4	14		
28,2	29,5	1HC005-069	100	75	M10	127	160	6	8	18		
28,2	29,5	1HC005-063	100	72	M10	225	260	6	8	18		
30,1	32,9	1HC005-104	52	75	M10	66	90	6	4	12		
30,1	32,9	1HC005-140	52	75	M10	120	145	6	4	14		
30,1	32,9	1HC005-103	52	75	M10	127	160	6	4	14		
30,1	32,9	1HC005-105	52	75	M10	127	160	6	4	18		
30,1	32,9	1HC005-106	52	75	M10	127	160	6	8	18		
30,1	32,9	1HC005-115	90	75	M10	127	160	6	4	18		45°
33,0	35,0	1HC005-169	100	75	M10	127	160	6	8	18		
36,0	39,0	1HC005-191	62	70	M10	127	160	6	8	18		
39,1	44,0	1HC005-195	100	70	M10	76	105	6	4	14		45°
44,1	52,0	1HC005-240	90	75	M12	127	160	12	4	18		45°

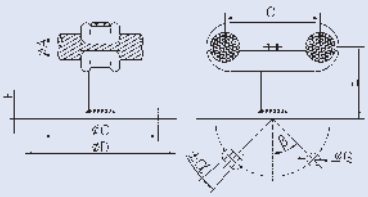

AL-Duplex-Earthing-Stirrup

Conductor

Dim. of Conductor		Code	Technical Data of Connector				
ØA			Dim. of Connector				Bolt Dim.
Min.	Max.		B	C	D	ØE	ØA
16,1	24,0	1HG005-020	30	100	110	30	M10
16,1	24,0	1HG005-033	100	150	170	25	M10
24,1	33,0	1HG005-025	45	124	137	25	M10
24,1	33,0	1HG005-010	45	100	120	30	M10
24,1	33,0	1HG005-055	50	124	137	25	M10
24,1	33,0	1HG005-043	50	120	195	30	M10
24,1	33,0	1HG005-030	70	100	130	30	M10
24,1	33,0	1HG005-032	100	100	130	25	M10
24,1	33,0	1HG005-031	100	100	130	30	M10
33,1	42,0	1HG005-073	60	140	142	25	M10
33,1	42,0	1HG005-029	60	140	144	35	M10
33,1	42,0	1HG005-041	90	110	130	25	M10
33,1	42,0	1HG005-040	90	110	130	35	M10
33,1	42,0	1HG005-163	100	180	190	30	M10

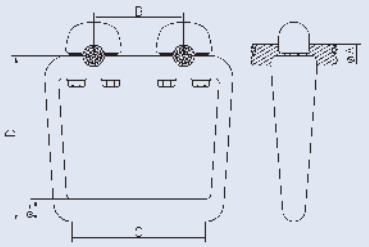

24,1	33,0	1HG110-005	52	120	246	30	M10
24,1	33,0	1HG110-033	100	110	120	25	M10
42,1	44,0	1HG110-030	70	120	156	35	M10

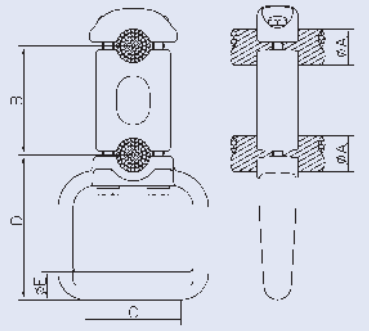

AL-Expansion-Bus-Support-Coupler

Tube-Tube

Dim. of Cond	Code	Technical Dates of Connector											
		B	Bolt dim.	Baseplate							Currentbridge		Max. Curr.
				Dimension			Drillingplan				ØG		
ØA			ØA	ØC	ØD	E	Pcs.	ØF	±α	β	Pcs.	Max.	
40	1KA200-013	65	M10	120	145	10	4	14		45°	1	31.7	1000
40	1KA200-014	65	M10	120	145	10	4	14		45°	2	31.7	2000
50	1KA200-025	70	M10	76	100	10	8	14			2	27.5	1700
50	1KA200-023	65	M10	120	145	10	8	14			1	27.5	850
50	1KA200-049	70	M10	120	145	10	4	14	45°		2	34.4	2300
50	1KA200-027	100	M10	120	145	10	8	14			2	27.5	1700
50	1KA200-028	70	M10	127	160	10	8	18			2	27.5	1700
63	1KA200-068	70	M10	76	100	10	8	14			2	27.5	1700
63	1KA200-058	85	M10	120	145	10	4	14		45°	2	34.4	2300
63	1KA200-055	90	M10	120	145	10	8	14			1	34.4	1150
63	1KA200-057	90	M10	120	145	10	8	14			2	34.4	2300
63	1KA200-080	85	M10	127	160	10	4	14		45°	2	34.4	2300
80	1KA198-080	100	M10	76	110	10	4	14			4	34.4	3200
80	1KA200-155	100	M10	76	100	10	8	14			2	39.2	2400
80	1KA200-159	100	M10	120	145	10	4	14		45°	2	44.8	2400
80	1KA200-160	100	M10	120	145	10	8	14			2	44.8	2400
80	1KA200-148	90	M10	127	160	10	8	18			1	34.4	1150
80	1KA200-162	100	M10	127	160	10	4	18		45°	2	39.2	2400
80	1KA200-149	100	M10	127	160	10	8	18			2	39.2	2400
100	1KA198-102	100	M10	76	110	10	4	14			4	34.4	3600
100	1KA200-252	100	M10	76	100	12	8	14			2	44.8	3200
100	1KA198-103	100	M10	76	110	10	8	14			4	34.4	3600
100	1KA200-254	100	M10	120	145	10	4	14	5°	45°	2	44.8	3200
100	1KA200-299	100	M10	127	160	10	4	18			2	44.8	3200
100	1KA200-297	100	M10	127	160	10	4	18		45°	2	44.8	2600
100	1KA200-255	100	M10	127	160	12	8	18	5°		2	44.8	3200
100	1KA198-101	130	M10	127	160	10	8	18			4	39.2	3600
120	1KA198-119	130	M10	76	100	10	8	14			2	44.8	3000
120	1KA200-399	130	M10	76	110	10	8	14			4	44.8	4000
120	1KA198-118	90	M10	120	145	10	8	14	5°		2	34.4	2300
120	1KA198-120	130	M10	120	145	10	8	14	5°		2	44.8	3000
120	1KA200-375	130	M10	127	160	12	4	18			2	34.4	2300
120	1KA200-359	130	M10	127	160	12	4	18		45°	2	34.4	2300
120	1KA200-395	130	M10	127	160	12	4	18		45°	4	34.4	4000
120	1KA198-125	130	M10	127	160	12	8	14	5°		2	44.8	3000
120	1KA198-122	130	M10	127	160	12	8	18	5°		2	44.8	3000

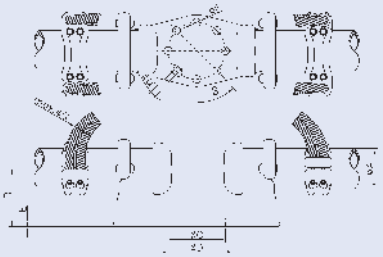

AL-Expansion-Bus-Support-Coupler

Tube-Tube

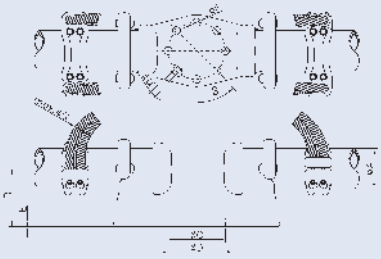

Dim. of Cond	Code	Technical Dates of Connector											
		B	Bolt dim.	Baseplate							Currentbridge		
				Dimension			Drillingplan				ØG		Max. Curr.
ØA			ØA	ØC	ØD	E	Pcs.	ØF	±α	β	Pcs.	Max.	
120	1KA200-397	130	M10	127	160	12	8	18	5°		4	34.4	4000
120	1KA200-387	130	M10	225	260	15	8	18			2	47.9	3400
120	1KA198-124	130	M10	225	260	12	8	18	5°		2	44.8	3000
120	1KA200-404	130	M10	225	260	12	8	18	5°		4	34.4	4000
140	1KA198-141	140	M10	127	160	12	4	18			2	44.8	3200
140	1KA198-140	140	M10	127	160	12	8	18			2	44.8	3200
140	1KA198-143	140	M10	127	160	12	8	18	5°		2	44.8	3200
140	1KA198-144	150	M10	127	160	12	4	18	5°	45°	4	34.4	4500
140	1KA198-145	140	M10	178	215	12	8	22			4	39.2	4500
140	1KA198-148	140	M10	178	220	15	4	22	25°		4	39.2	4500
150	1KA198-151	150	M10	127	160	12	8	18			2	44.8	3200
150	1KA198-150	150	M10	225	260	12	4	18	5°	45°	4	34.4	4500
150	1KA198-153	150	M10	225	260	12	8	18			4	39.2	4500
160	1KA198-160	150	M10	120	145	12	4	14		45°	2	44.8	3200
160	1KA200-427	150	M10	120	145	12	4	14		45°	4	34.4	4500
160	1KA198-163	150	M10	127	160	12	4	18		45°	2	44.8	4500
160	1KA198-165	150	M10	127	160	12	8	18			2	44.8	3200
160	1KA200-435	150	M12	127	160	12	8	18	5°		2	44.8	3200
160	1KA198-166	150	M10	225	260	12	4	18	5°	45°	4	34.4	4500
160	1KA200-456	150	M10	225	260	16	8	18	5°		4	34.4	4500
1,5“	1KA200-025	70	M10	76	100	10	8	14			2	27.5	1750
1,5“	1KA200-023	65	M10	120	145	10	8	14			1	27.5	860
1,5“	1KA200-049	70	M10	120	145	10	4	14	45°		2	34.4	2300
1,5“	1KA200-027	100	M10	120	145	10	8	14			2	27.5	1750
1,5“	1KA200-028	70	M10	127	160	10	8	18			2	27.5	1750
2“	1KA200-068	70	M10	76	100	10	8	14			2	27.5	1700
2“	1KA200-058	85	M10	120	145	10	4	14		45°	2	34.4	2300
2“	1KA200-055	90	M10	120	145	10	8	14			1	34.4	1150
2“	1KA200-057	90	M10	120	145	10	8	14			2	34.4	2300
2“	1KA200-080	85	M10	127	160	10	4	14		45°	2	34.4	2300
2,5“	1KA200-153	95	M10	127	160	10	4	18		45°	2	34.4	2300
2,5“	1KA200-158	100	M10	225	260	10	8	18	5°		2	44.8	2400
3“	1KA198-089	100	M10	76	100	10	4	14	5°	45°	2	34.4	2300
3“	1KA198-091	100	M10	127	160	10	4	18	5°	45°	2	39.2	2600
3“	1KA198-088	100	M10	127	160	10	8	18			2	34.4	2300
3,5“	1KA198-102	100	M10	76	110	10	4	14			4	34.4	3600

AL-Expansion-Bus-Support-Coupler

Tube-Tube

Dim. of Cond	Code	Technical Dates of Connector											
		B	Bolt dim.	Baseplate							Currentbridge		
				Dimension			Drillingplan				ØG		Max. Curr.
ØA			ØA	ØC	ØD	E	Pcs.	ØF	±α	β	Pcs.	Max.	
3,5“	1KA200-252	100	M10	76	100	12	8	14			2	44.8	3200
3,5“	1KA198-103	100	M10	76	110	10	8	14			4	34.4	3600
3,5“	1KA200-254	100	M10	120	145	10	4	14	5°	45°	2	44.8	3200
3,5“	1KA200-299	100	M10	127	160	10	4	18			2	44.8	3200
3,5“	1KA200-297	100	M10	127	160	10	4	18		45°	2	44.8	2600
3,5“	1KA200-255	100	M10	127	160	12	8	18	5°		2	44.8	3200
3,5“	1KA198-101	130	M10	127	160	10	8	18			4	39.2	3600
4“	1KA198-117	130	M10	127	160	12	4	18	13°	45°	2	44.8	3000
4“	1KA198-116	150	M10	127	160	12	4	18	13°	45°	2	44.8	3000
4“	1KA198-111	150	M10	127	160	12	8	18			4	44.8	4000
4“	1KA198-114	150	M10	225	260	12	8	18			2	44.8	3000
4,5“	1KA198-126	130	M10	127	160	10	8	18	5°		2	44.8	3000
5“	1KA198-141	140	M10	127	160	12	4	18			2	44.8	3200
5“	1KA198-140	140	M10	127	160	12	8	18			2	44.8	3200
5“	1KA198-143	140	M10	127	160	12	8	18	5°		2	44.8	3200
5“	1KA198-144	150	M10	127	160	12	4	18	5°	45°	4	34.4	4500
5“	1KA198-145	140	M10	178	215	12	8	22			4	39.2	4500
5“	1KA198-148	140	M10	178	220	15	4	22	25°		4	39.2	4500

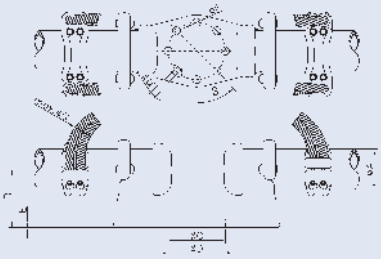

AL-Expansion-Bus-Support-Coupler

Tube-Tube (sliding)

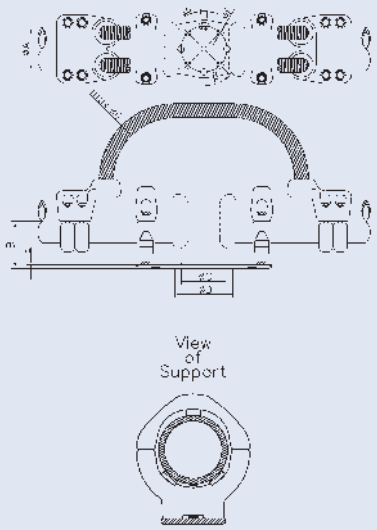

Dim. of Cond	Code	Technical Dates of Connector											
		B	Bolt dim.	Baseplate							Currentbridge		Max. Curr.
				Dimension			Drillingplan				ØG		
ØA			ØA	ØC	ØD	E	Pcs.	ØF	±α	β	Pcs.	Max.	
80	1KA250-080	100	M12	120	145	10	8	14	5°		2	39.2	2400
100	1KA250-043	120	M12	120	145	10	8	14	5°		2	39.2	2600
100	1KA250-040	120	M12	127	160	10	4	18		45°	1	44.8	1550
120	1KA250-128	130	M12	225	260	10	8	18	5°		2	44.8	3100
160	1KA250-159	150	M12	120	145	12	4	14	5°	45°	2	39.2	2650
160	1KA250-045	150	M12	127	160	12	8	18	5°		2	39.2	2650
200	1KA198-230	170	M12	225	260	15	8	18			2	44.8	3100
250	1KA250-250	225	M12	225	260	15	8	18	5°		2	44.8	3100
3,5“	1KA250-043	120	M12	120	145	10	8	14	5°		2	39.2	2600
3,5“	1KA250-040	120	M12	127	160	10	4	18		45°	1	44.8	1550
8“	1KA250-222	180	M12	225	260	15	8	18	5°		2	44.8	3100

AL-Expansion-Flat Terminal

Tube-Flat Terminal

Dimension of Conductor			Code	Technical Dates of Connector					
				Max. Current	E	F	Currentbridge ØG		Bolt Dim.
ØA	C	D					Pcs.	Max.	ØA
50	100	100	1MA030-054	850	15	70	1	27.5	M10
50	100	100	1MA030-053	1600	15	70	2	34.4	M10
50	100	100	1MA030-052	1600	15	90	2	27.5	M10
63	100	100	1MA030-072	1600	15	85	2	34.4	M10
63	100	100	1MA030-035	1150	25	100	1	34.4	M10
63	200	100	1MA030-073	2250	20	90	2	34.4	M10
80	100	100	1MA030-080	1550	25	90	1	44.8	M12
80	100	100	1MA030-088	1600	15	100	2	34.4	M12
80	100	100	1MA030-084	1550	25	100	1	44.8	M12
80	100	100	1MA030-089	2500	25	100	2	44.8	M12
80	125	125	1MA030-078	1150	25	90	1	34.4	M12
80	125	125	1MA030-111	2500	20	100	2	39.2	M12
80	200	100	1MA030-135	1550	25	100	1	44.8	M12
80	200	100	1MA030-132	3100	20	100	2	44.8	M12
80	200	100	1MA030-091	3100	25	100	2	44.8	M12
100	100	100	1MA030-112	1550	20	120	1	44.8	M12
100	100	100	1MA030-602	2250	20	120	2	34.4	M12
100	100	100	1MA030-119	2500	25	100	2	39.2	M12
100	100	100	1MA030-180	3200	30	100	2	44.8	M12
100	125	125	1MA030-115	3200	30	100	2	44.8	M12
100	125	125	1MA030-102	3200	30	130	4	34.4	M12
100	200	100	1MA030-130	2700	20	115	2	39.2	M12
120	100	100	1MA030-122	2250	25	130	2	34.4	M12
120	100	100	1MA030-626	3200	30	130	2	44.8	M12
120	125	125	1MA030-143	3200	30	130	4	34.4	M12
120	200	100	1MA030-127	2250	20	110	2	34.4	M12
120	200	100	1MA030-627	3200	20	130	2	44.8	M12
120	200	100	1MA030-137	4000	20	130	4	34.4	M12
120	200	100	1MA030-641	3200	20	140	2	44.8	M12
120	200	100	1MA030-141	3200	20	145	2	34.4	M12
140	125	125	1MA030-649	2500	20	140	2	44.8	M12
160	100	100	1MA030-660	2500	20	155	2	39.2	M12
160	200	100	1MA030-689	3200	20	150	2	44.8	M12
160	200	100	1MA030-683	4000	20	150	4	34.4	M12
160	200	100	1MA030-680	2700	20	155	2	39.2	M12
200	200	100	1MA030-706	3200	20	175	2	44.8	M12

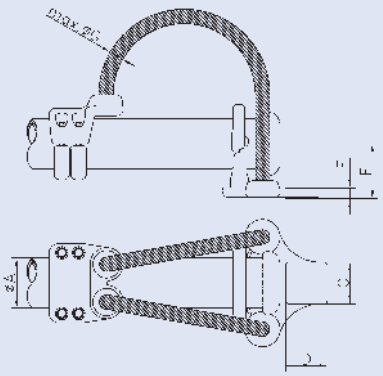

AL-Expansion-Flat Terminal

Tube-Flat Terminal

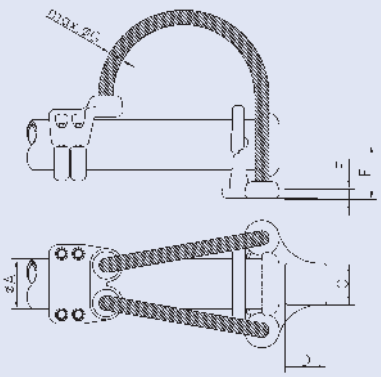

Dimension of Conductor			Code	Technical Dates of Connector					
				Max. Current	E	F	Currentbridge ØG		Bolt Dim.
ØA	C	D					Pcs.	Max.	ØA
200	200	100	1MA030-703	3200	20	180	2	44.8	M12
250	100	100	1MA030-754	3200	30	225	2	44.8	M12
250	200	100	1MA030-250	4000	30	235	4	39.2	M12
1,5“	100	100	1MA030-054	850	15	70	1	27.5	M10
1,5“	100	100	1MA030-053	1600	15	70	2	34.4	M10
1,5“	100	100	1MA030-052	1600	15	90	2	27.5	M10
2“	100	100	1MA030-072	1600	15	85	2	34.4	M10
2“	100	100	1MA030-035	1150	25	100	1	34.4	M10
2“	200	100	1MA030-073	2250	20	90	2	34.4	M10
3“	100	100	1MA030-093	2250	20	100	2	34.4	M12
3,5“	100	100	1MA030-112	1550	20	120	1	44.8	M12
3,5“	100	100	1MA030-119	2500	25	100	2	39.2	M12
3,5“	100	100	1MA030-100	2700	30	100	2	39.2	M12
3,5“	125	125	1MA030-115	3200	30	100	2	44.8	M12
3,5“	125	125	1MA030-102	3200	30	130	4	34.4	M12
5“	125	125	1MA030-649	2500	20	140	2	44.8	M12

AL-Expansion-Flat Terminal

Tube (sliding)-Flat Terminal

Dimension of Conductor			Code	Technical Dates of Connector					
				Max. Current	E	F	Currentbridge ØG		Bolt Dim.
ØA	C	D					Pcs.	Max.	ØA
80	100	100	1MA060-075	2500	25	90	2	44.8	M12
100	100	100	1MA060-101	2500	20	160	2	34.4	M12
120	100	100	1MA060-124	3200	30	130	2	44.8	M12
120	200	100	1MA060-131	4000	20	130	4	31.7	M12
120	200	100	1MA060-132	4000	20	145	4	31.7	M12
160	100	100	1MA060-168	2500	25	150	2	44.8	M12
160	100	100	1MA060-170	2500	25	160	2	44.8	M12
160	200	100	1MA060-164	4000	20	150	2	44.8	M12
160	200	100	1MA030-687	4000	20	150	4	34.4	M12
200	200	100	1MA030-704	4000	20	200	4	39.2	M12
250	100	100	1MA060-251	2500	30	225	2	44.8	M12
3,5“	100	100	1MA060-101	2500	20	160	2	34.4	M12

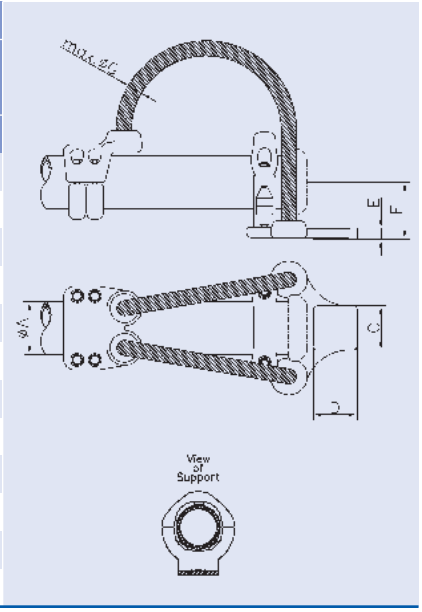

160	100	100	1MA015-165	2500	25	155	2	44.8	M12
200	100	100	1MA015-202	2500	20	150	2	34.4	M12
250	200	100	1MA015-250	4000	20	200	2	44.8	M12

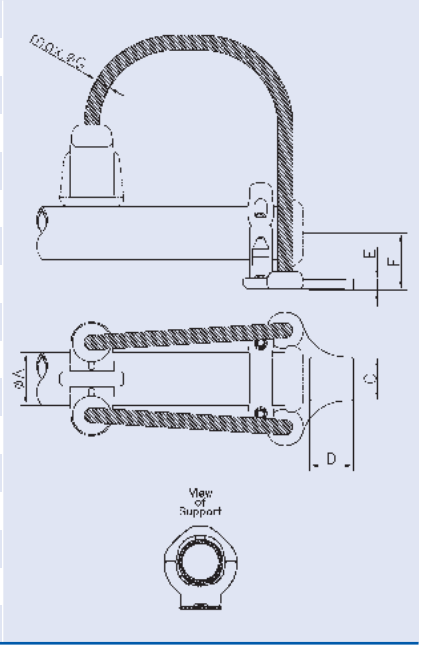

AL-Expansion-Flat Terminal

Tube (roller bearions)-Flat Terminal

Figur 1

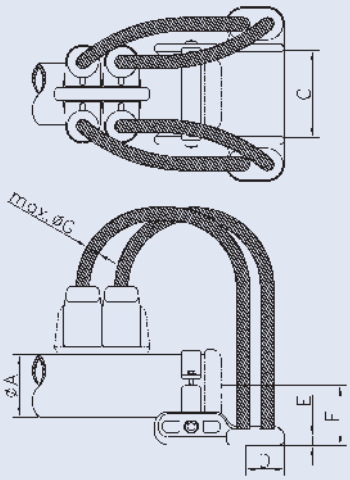

Figur 2

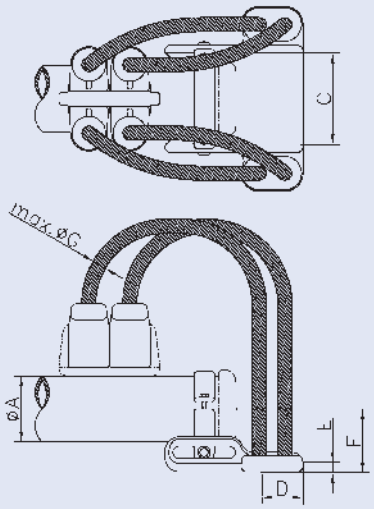

Dimension of Conductor			Code	Technical Dates of Connector						
				Max. Current	E	F	Currentbridge ØG		Bolt Dim.	Figur
ØA	C	D					Pcs.	Max.	ØA	
160	200	100	1MA315-160	3400	25	150	2	47.9	M12	1
160	200	100	1MA315-166	3400	25	150	2	47.9	M12	2
160	200	100	1MA315-162	4000	25	155	4	47.9	M12	1
160	200	100	1MA315-161	4000	25	155	4	47.9	M12	2
200	200	100	1MA315-200	3400	25	175	2	47.9	M12	1
200	200	100	1MA315-201	3400	25	175	2	47.9	M12	2
200	200	100	1MA315-202	4000	25	180	4	47.9	M12	2
250	200	100	1MA315-258	3400	25	200	2	47.9	M12	2
250	200	100	1MA315-253	4000	25	200	4	47.9	M12	1
250	200	100	1MA315-254	4000	25	200	4	47.9	M12	2
250	200	100	1MA315-250	3200	25	300	2	44.8	M12	1

AL-Expansion-Flat Terminal

Tube (inside sliding)-Flat Terminal

Dimension of Conductor					Code	Technical Dates of Connector					
	ØB		C	D		Max. Current	E	F	Currentbridge ØG		Bolt Dim.
ØA	Min.	Max.							Pcs.	Max.	ØA
63	47	55	75	75	1MA520-060	2000	25		2	34.4	M10
80	70	70	100	100	1MA520-109	1600	13		2	34.4	M12
80	68	68	125	125	1MA520-080	3200	25		2	44.8	M12
80	60	72	125	125	1MA520-107	2300	25		2	34.4	M12
100	88	90	75	75	1MA520-100	2000	25		2	34.4	M12
100	88	90	125	125	1MA520-083	2700	25		2	39.2	M12
100	84	84	200	100	1MA530-102	2300	25	30	2	34.4	M12
100	84	84	200	100	1MA530-100	3400	25	30	4	27.5	M12
120	110	110	100	100	1MA520-121	2300	30		2	34.4	M12
120	96	112	100	100	1MA530-114	2300	25	30	2	34.4	M12
120	88	102	125	125	1MA520-084	3200	25		2	44.8	M12
120	96	112	125	125	1MA530-115	2300	25	30	2	34.4	M12
120	110	110	125	125	1MA520-120	2300	25		2	34.4	M12
120	96	96	200	100	1MA530-121	4000	25	-38	4	34.4	M12
120	104	104	200	100	1MA530-122	2300	25	30	2	34.4	M12
160	148	148	125	125	1MA530-124	3200	25		4	34.4	M12
160	148	148	200	100	1MA520-160	3200	30		2	44.8	M12
160	148	148	200	100	1MA530-123	4000	25		4	34.4	M12
2“	47	55	75	75	1MA520-060	2000	25		2	34.4	M10
2,5“	60	72	125	125	1MA520-107	2300	25		2	34.4	M12
3,5“	88	90	75	75	1MA520-100	2000	25		2	34.4	M12
3,5“	88	90	125	125	1MA520-083	2700	25		2	39.2	M12
4“	96	112	100	100	1MA530-114	2300	25	30	2	34.4	M12
4“	88	102	125	125	1MA520-084	3200	25		2	44.8	M12
4“	96	112	125	125	1MA530-115	2300	25	30	2	34.4	M12
4“	96	96	200	100	1MA530-121	4000	25	-38	4	34.4	M12
4“	104	104	200	100	1MA530-122	2300	25	30	2	34.4	M12
4,5“	96	112	100	100	1MA530-114	2300	25	30	2	34.4	M12
4,5“	88	102	125	125	1MA520-084	3200	25		2	44.8	M12
4,5“	96	112	125	125	1MA530-115	2300	25	30	2	34.4	M12

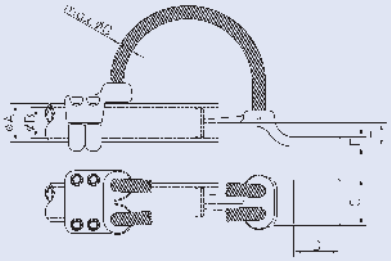

AL-Expansion-Connector

Tube-Stud

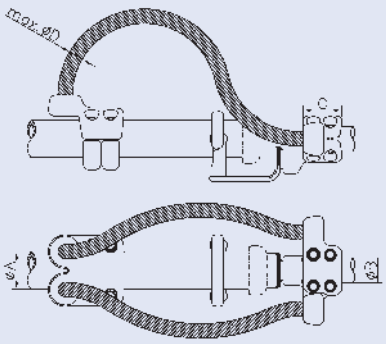

Dimension of Conductor		Code	Technical Dates of Connector					
			Max. Current	C	Currentbridge ØG		Bolt Dimension	
ØA	ØB				Pcs.	Max.	ØA	ØB
40.0	30.0	1LA030-038	2000	76	2	27.5	M10	M10
40.0	40.0	1LA030-038	2000	76	2	27.5	M10	M10
50.0	30.0	1LA030-051	1000	72	1	27.5	M10	M10
50.0	30.0	1LA030-050	2000	76	2	27.5	M10	M10
50.0	40.0	1LA030-051	1000	72	1	27.5	M10	M10
50.0	40.0	1LA030-050	2000	76	2	27.5	M10	M10
60.0	30.0	1LA030-044	1000	76	1	27.5	M10	M10
60.0	30.0	1LA030-062	2000	76	2	27.5	M10	M10
60.0	40.0	1LA030-044	1000	76	1	27.5	M10	M10
60.0	40.0	1LA030-062	2000	76	2	27.5	M10	M10
80.0	30.0	1LA040-080	2000	112	2	27.5	M12	M10
80.0	40.0	1LA040-080	2000	112	2	27.5	M12	M10
80.0	50.0	1LA040-080	2000	112	2	27.5	M12	M10
80.0	60.0	1LA040-080	2000	112	2	27.5	M12	M10
100.0	30.0	1LA040-099	2000	114	2	27.5	M12	M10
100.0	40.0	1LA040-099	2000	114	2	27.5	M12	M10
100.0	50.0	1LA040-099	2000	114	2	27.5	M12	M10
100.0	60.0	1LA040-099	2000	114	2	27.5	M12	M10
100.0	30.0	1LA040-100	3000	102	4	27.5	M12	M10
100.0	40.0	1LA040-100	3000	102	4	27.5	M12	M10
100.0	50.0	1LA040-100	3000	102	4	27.5	M12	M10
100.0	60.0	1LA040-100	3000	102	4	27.5	M12	M10
120.0	30.0	1LA030-064	3000	94	2	44.8	M12	M10
120.0	40.0	1LA030-064	3000	94	2	44.8	M12	M10
120.0	50.0	1LA030-064	3000	94	2	44.8	M12	M10
120.0	60.0	1LA030-064	3000	94	2	44.8	M12	M10
160.0	30.0	1LA040-160	3000	102	4	34.4	M12	M10
160.0	40.0	1LA040-160	3000	102	4	34.4	M12	M10
160.0	50.0	1LA040-160	3000	102	4	34.4	M12	M10
160.0	60.0	1LA040-160	3000	102	4	34.4	M12	M10
1,5“	30.0	1LA030-051	1000	72	1	27.5	M10	M10
1,5“	30.0	1LA030-050	2000	76	2	27.5	M10	M10
1,5“	40.0	1LA030-051	1000	72	1	27.5	M10	M10
1,5“	40.0	1LA030-050	2000	76	2	27.5	M10	M10
2“	30.0	1LA030-044	1000	76	1	27.5	M10	M10
2“	30.0	1LA030-062	2000	76	2	27.5	M10	M10

AL-Expansion-Connector

Tube-Stud

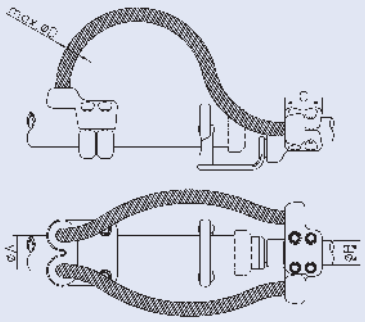

Dimension of Conductor		Code	Technical Dates of Connector					
			Max. Current	C	Currentbridge ØG		Bolt Dimension	
ØA	ØB				Pcs.	Max.	ØA	ØB
2“	40.0	1LA030-044	1000	76	1	27.5	M10	M10
2“	40.0	1LA030-062	2000	76	2	27.5	M10	M10
2,5“	30.0	1LA030-020	2300	85	2	34.4	M12	M10
2,5“	40.0	1LA030-020	2300	85	2	34.4	M12	M10
3“	30.0	1LA030-060	2600	93	2	39.2	M12	M10
3“	40.0	1LA030-060	2600	93	2	39.2	M12	M10
3“	50.0	1LA030-060	2600	93	2	39.2	M12	M10
3“	60.0	1LA030-060	2600	93	2	39.2	M12	M10
3,5“	30.0	1LA040-099	2000	114	2	27.5	M12	M10
3,5“	40.0	1LA040-099	2000	114	2	27.5	M12	M10
3,5“	50.0	1LA040-099	2000	114	2	27.5	M12	M10
3,5“	60.0	1LA040-099	2000	114	2	27.5	M12	M10
3,5“	30.0	1LA040-100	3000	102	4	27.5	M12	M10
3,5“	40.0	1LA040-100	3000	102	4	27.5	M12	M10
3,5“	50.0	1LA040-100	3000	102	4	27.5	M12	M10
3,5“	60.0	1LA040-100	3000	102	4	27.5	M12	M10

AL-T-Expansion-Bus-Support-Coupler

Tube-Flat Terminal

Dim. of Cond	Code	Technical Dates of Connector											
		B	Bolt dim.	Baseplate							Currentbridge		
				Dimension			Drillingplan				ØG		Max. Curr.
ØA			ØA	ØC	ØD	E	Pcs.	ØF	±α	β	Pcs.	Max.	
80	1KC105-040	100	M10	100	100	35					2	39.2	2650
80	1KC105-045	100	M10	100	200	25					2	39.2	2650
80	1KC100-080	100	M10	200	100	35					2	44.8	3100
120	1KC100-120	130	M10	225	260	30	8	18			2	44.8	3100
200	1KC100-200	170	M12	225	260	30	8	18			4	44.8	6200
250	1KC100-250	220	M12	200	100	30					4	39.2	5300
8“	1KC100-220	190	M12	225	260	30	8	18			4	44.8	6200

Figur 1

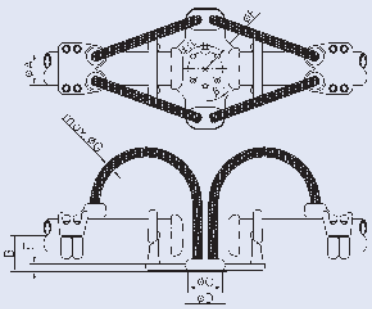

Figur 2

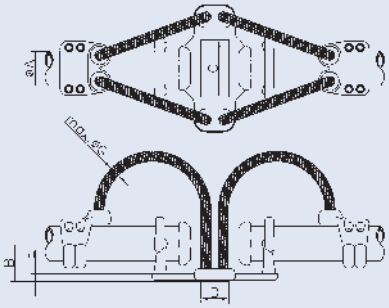

AL-T-Expansion-Bus-Support-Coupler

Tube (sliding)-Flat Terminal

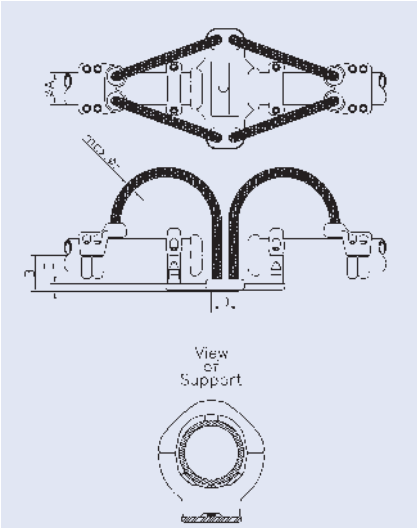

Dim. of Cond	Code	Technical Dates of Connector							
		B	Bolt dim.	Flat Terminal			Currentbridge		
				Dimension			ØG		Max. Curr.
ØA			ØA	ØC	ØD	E	Pcs.	Max.	
80	1KC105-040	100	M10	100	100	35	2	39.2	2650
80	1KC105-045	100	M10	100	200	25	2	39.2	2650
80	1KC100-080	100	M10	200	100	35	2	44.8	3100
120	1KC100-120	130	M10	225	260	30	2	44.8	3100
200	1KC100-200	170	M12	225	260	30	4	44.8	6200
250	1KC100-250	220	M12	200	100	30	4	39.2	5300
8“	1KC100-220	190	M12	225	260	30	4	44.8	6200

AL-T-Expansion-Flat Terminal

Tube-Flat Terminal

Dimension of Conductor			Code	Technical Dates of Connector					
				Max. Current	E	F	Currentbridge ØG		Bolt Dim.
ØA	C	D					Pcs.	Max.	ØA
120	80	80	1MB040-120	2500	35	255	2	34.4	M12
140	75	75	1MB040-141	2500	35	215	2	34.4	M12
160	100	100	1MB040-161	3200	70	215	2	44.8	M12
200	100	100	1MB040-211	1300	12		2	44.8	M12
5"	75	75	1MB040-141	2500	35	215	2	34.4	M12

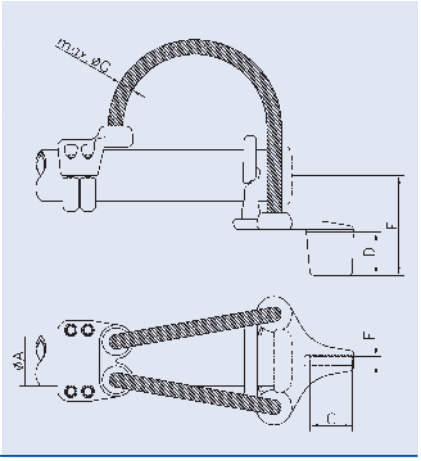

AL-90°-Expansion-Bus-Support-Coupler

Tube-Tube

Dim. of Cond	Code	Technical Dates of Connector											
		B	Bolt dim.	Baseplate							Currentbridge		
				Dimension			Drillingplan				ØF		Max. Curr.
ØA			ØA	ØC	ØD	E	Pcs.	ØF	±α	β	Pcs.	Max.	
63	1KB200-040	70	M10	76	100	12	8	14			2	34.4	2250
63	1KB200-042	85	M10	127	160	12	8	14			2	34.4	2250
80	1KB200-043	100	M10	120	145	12	4	14		45°	2	34.4	2250
120	1KB200-090	130	M10	120	145	10	8	14	5°		2	44.8	3000
120	1KB198-120	130	M10	120	160	10	8	18	5°		2	44.8	3000
120	1KB200-093	130	M10	127	160	10	8	14			2	44.8	3000
120	1KB198-091	130	M10	127	160	10	8	18	5°		2	44.8	3000
120	1KB200-089	130	M10	225	260	12	4	18	5°	45°	2	44.8	3000
150	1KB198-150	150	M10	225	260	15	8	18			4	44.8	4500
160	1KB198-159	155	M10	127	160	15	8	18			2	44.8	3200
160	1KB198-160	155	M10	225	260	15	8	18			2	44.8	3200
250	1KB198-252	225	M12	127	160	15	8	18			2	44.8	3200
250	1KB198-250	225	M12	225	260	15	8	18			4	44.8	6200
2“	1KB200-040	70	M10	76	100	12	8	14			2	34.4	2250
2“	1KB200-042	85	M10	127	160	12	8	14			2	34.4	2250

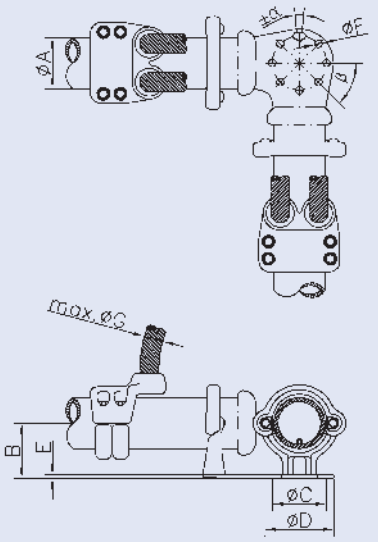

63	1KB300-063	90	M10	120	145	10	4	14	5°	45°	2	34.4	2250
63	1KB300-064	90	M10	127	160	10	8	18	5°		2	34.4	2250
80	1KB200-053	100	M10	127	160	10	8	18			2	39.2	2400
100	1KB200-051	100	M10	127	160	10	8	18			2	39.2	2600
120	1KB300-119	130	M10	225	260	12	8	18	5°		2	44.8	3200
2“	1KB300-063	90	M10	120	145	10	4	14	5°	45°	2	34.4	2250
2“	1KB300-064	90	M10	127	160	10	8	18	5°		2	34.4	2250
3,5“	1KB200-051	100	M10	127	160	10	8	18			2	39.2	2600

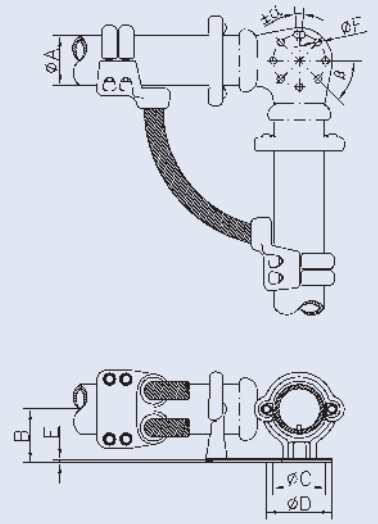

AL-90°-Expansion-Bus-Support-Coupler

Tube-Tube

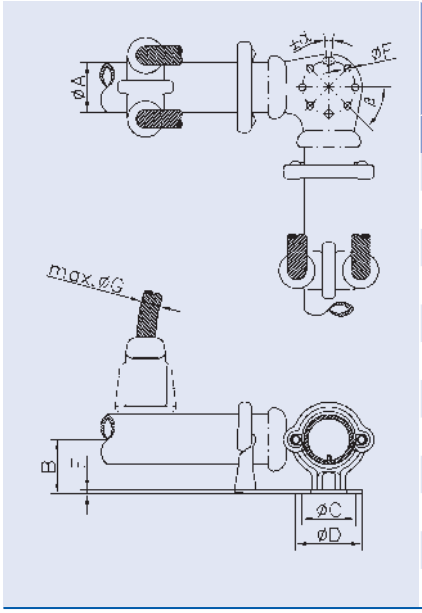

Dim. of Cond	Code	Technical Dates of Connector											
		B	Bolt dim.	Baseplate							Currentbridge		Max. Curr.
				Dimension			Drillingplan				ØF		
ØA			ØA	ØC	ØD	E	Pcs.	ØF	±α	β	Pcs.	Max.	
120	1KB105-120	130	M10	127	160	12	8	18			2	44.8	3200
160	1KB105-161	150	M12	127	160	12	8	18			2	44.8	3200
160	1KB105-162	150	M10	225	260	15	8	18			4	34.4	4500
200	1KB105-200	175	M12	225	260	15	8	18			4	34.4	4500

AL-90°-Expansion-Flat Terminal

Tube-Flat Terminal

Dimension of Conductor			Code	Technical Dates of Connector					
				Max. Current	E	F	Currentbridge ØG		Bolt Dim.
ØA	C	D					Pcs.	Max.	ØA
63	100	100	1MB030-064	2300	30	184	2	34.4	M10
63	200	100	1MB030-063	2300	20	196	2	34.4	M10
80	100	100	1MB030-108	3200	30	195	2	44.8	M12
100	125	125	1MB030-116	3200	25	255	4	34.4	M12
120	100	100	1MB030-121	3000	30	239	2	44.8	M12
120	125	125	1MB030-120	2000	16	291	2	34.4	M12
120	200	100	1MB030-125	3000	20	260	2	44.8	M12
120	200	100	1MB030-126	3000	25	270	4	34.4	M12
140	200	100	1MB030-142	3200	30	246	2	44.8	M12
160	80	80	1MB030-164	2000	25	225	4	44.8	M12
160	100	100	1MB030-160	3200	30	234	2	44.8	M12
250	120	100	1MB030-250	3200	30	310	2	44.8	M12
2“	100	100	1MB030-064	2300	30	184	2	34.4	M10
2“	200	100	1MB030-063	2300	20	196	2	34.4	M10
3,5“	125	125	1MB030-116	3200	25	255	4	34.4	M12
4“	100	100	1MB030-114	3200	30	239	2	44.8	M12
5“	200	100	1MB030-142	3200	30	246	2	44.8	M12

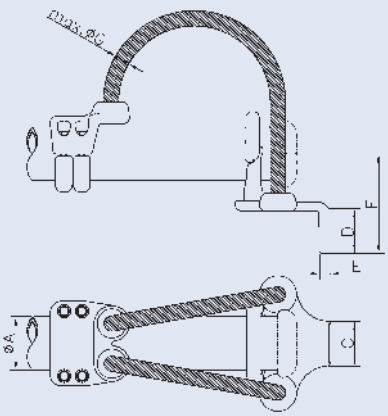

AL-90°-Expansion-Flat Terminal

Tube-Flat Terminal (straight)

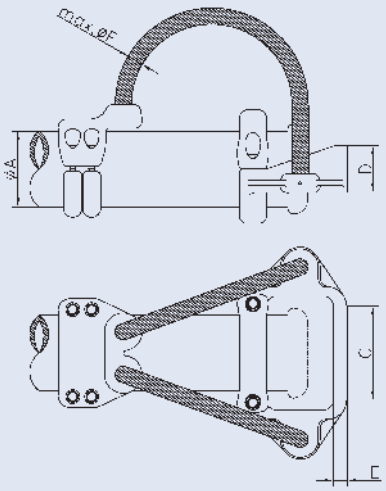

Dimension of Conductor			Code	Technical Dates of Connector				
				Max. Current	E	Currentbridge ØG		Bolt Dim.
ØA	C	D				Pcs.	Max.	ØA
80	200	100	1MD020-100	2700	18	2	39.2	M12
100	200	100	1MD020-105	2700	18	2	39.2	M12
120	200	100	1MD020-109	2700	18	2	39.2	M12
160	125	125	1MD020-166	3200	30	2	44.8	M12
160	200	100	1MD020-167	3200	20	2	44.8	M12
160	200	100	1MD020-163	4000	30	4	34.4	M12
250	200	100	1MD020-250	4000	25	4	39.2	M12
250	220	128	1MD020-251	3200	25	2	44.8	M12
2,5“	200	100	1MD020-100	2700	18	2	39.2	M12
3,5“	200	100	1MD020-105	2700	18	2	39.2	M12
4“	200	100	1MD020-109	2700	18	2	39.2	M12

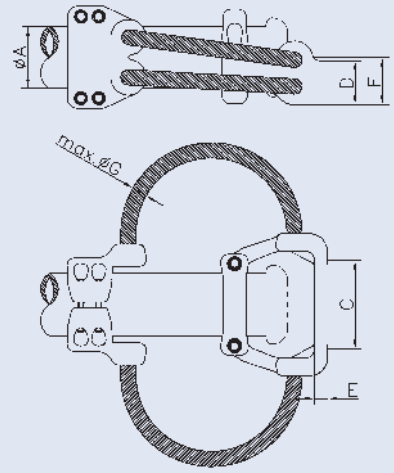

Dimension of Conductor			Code	Technical Dates of Connector					
				Max. Current	E	F	Currentbridge ØG		Bolt Dim.
ØA	C	D					Pcs.	Max.	ØA
63	200	100	1MD050-063	1550	20		1	44.8	M10
80	200	100	1MD050-082	2400	25	-60	2	39.2	M12
80	200	100	1MD050-083	2400	25		2	44.8	M12
120	200	100	1MD050-120	3000	25		2	44.8	M12
140	200	100	1MD050-142	4000	25		4	44.8	M12
140	200	100	1MD050-141	4000	30	105	4	44.8	M12
150	200	100	1MD050-141	4000	30	105	4	44.8	M12
160	200	100	1MD050-161	5000	25		4	44.8	M12
160	200	100	1MD050-141	5000	30	105	4	44.8	M12
200	200	100	1MD050-190	6000	25		4	44.8	M12
2“	200	100	1MD050-063	1550	20		1	44.8	M10
2,5“	200	100	1MD050-082	2400	25	-60	2	39.2	M12
2,5“	200	100	1MD050-083	2400	25		2	44.8	M12
4“	200	100	1MD050-120	3000	25		2	44.8	M12
4,5“	200	100	1MD050-120	3000	25		2	44.8	M12
5“	200	100	1MD050-142	4000	25		4	44.8	M12
5“	200	100	1MD050-141	4000	30	105	4	44.8	M12
8“	200	100	1MD050-220	6200	25		4	44.8	M12

AL-90°-Expansion-Connector

Tube-Stud

Dimension of Conductor		Code	Technical Dates of Connector						
			Max. Current	C	D	Currentbridge ØE		Bolt Dimension	
ØA	ØB					Pcs.	Max.	ØA	ØB
50.0	30.0	1LB020-045	850	85	160	1	27.5	M10	M10
50.0	40.0	1LB020-045	850	85	160	1	27.5	M10	M10
50.0	30.0	1LB020-012	2000	92	136	2	34.4	M10	M10
50.0	40.0	1LB020-012	2000	92	136	2	34.4	M10	M10
63.0	30.0	1LB020-011	1350	85	136	1	39.2	M10	M10
63.0	40.0	1LB020-011	1350	85	136	1	39.2	M10	M10
63.0	30.0	1LB020-010	2000	92	136	2	34.4	M10	M10
63.0	40.0	1LB020-010	2000	92	136	2	34.4	M10	M10
63.0	50.0	1LB020-009	2000	102	177	2	34.4	M10	M12
63.0	60.0	1LB020-009	2000	102	177	2	34.4	M10	M12
70.0	30.0	1LB020-070	2000	106	189	2	44.8	M12	M10
70.0	40.0	1LB020-070	2000	106	189	2	44.8	M12	M10
80.0	30.0	1LB020-114	1400	90	194	1	44.8	M12	M10
80.0	40.0	1LB020-114	1400	90	194	1	44.8	M12	M10
80.0	50.0	1LB020-119	1550	96	200	1	44.8	M12	M10
80.0	60.0	1LB020-119	1550	96	200	1	44.8	M12	M10
100.0	30.0	1LB020-121	2000	107	190	2	34.4	M12	M10
100.0	30.0	1LB020-127	2000	107	210	2	39.2	M12	M10
100.0	40.0	1LB020-121	2000	107	190	2	34.4	M12	M10
100.0	40.0	1LB020-127	2000	107	210	2	39.2	M12	M10
100.0	50.0	1LB020-122	2300	102	203	2	34.4	M12	M12
100.0	60.0	1LB020-122	2300	102	203	2	34.4	M12	M12
120.0	30.0	1LB020-140	2000	107	200	2	34.4	M12	M10
120.0	40.0	1LB020-140	2000	107	200	2	34.4	M12	M10
120.0	50.0	1LB020-130	3000	102	212	2	44.8	M12	M10
120.0	60.0	1LB020-130	3000	102	212	2	44.8	M12	M10
140.0	30.0	1LB020-143	3000	102	240	2	44.8	M12	M12
140.0	30.0	1LB020-142	3000	102	248	2	44.8	M12	M12
140.0	40.0	1LB020-143	3000	102	240	2	44.8	M12	M12
140.0	40.0	1LB020-142	3000	102	248	2	44.8	M12	M12
140.0	40.0	1LB020-141	3200	142	330	4	39.2	M12	M12
140.0	50.0	1LB020-143	3000	102	240	2	44.8	M12	M12
140.0	50.0	1LB020-142	3000	102	248	2	44.8	M12	M12
140.0	50.0	1LB020-141	3200	142	330	4	39.2	M12	M12
140.0	60.0	1LB020-143	3000	102	240	2	44.8	M12	M12
140.0	60.0	1LB020-142	3000	102	248	2	44.8	M12	M12

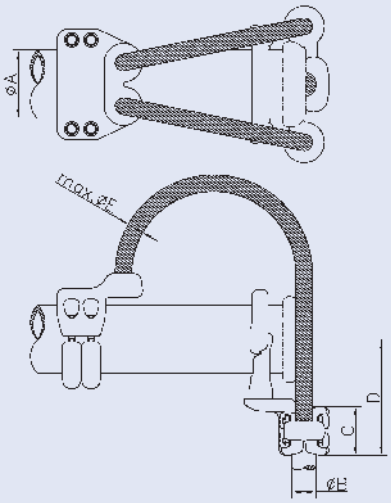

AL-90°-Expansion-Connector

Tube-Stud

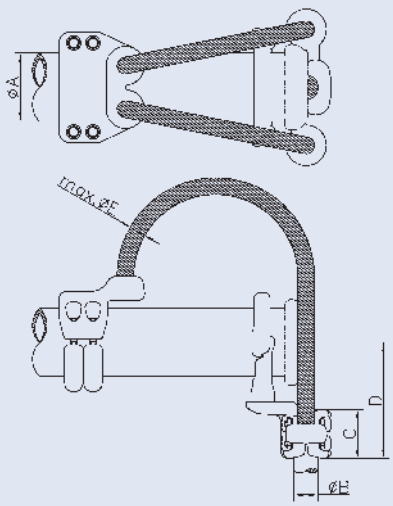

Dimension of Conductor		Code	Technical Dates of Connector						
			Max. Current	C	D	Currentbridge ØE		Bolt Dimension	
ØA	ØB					Pcs.	Max.	ØA	ØB
140.0	60.0	1LB020-141	3200	142	330	4	39.2	M12	M12
160.0	30.0	1LB020-160	3000	102	260	2	44.8	M12	M12
160.0	30.0	1LB020-161	3000	102	260	4	44.8	M12	M12
160.0	30.0	1LB020-174	3000	102	293	2	44.8	M12	M12
160.0	40.0	1LB020-160	3000	102	260	2	44.8	M12	M12
160.0	40.0	1LB020-161	3000	102	260	4	44.8	M12	M12
160.0	40.0	1LB020-174	3000	102	293	2	44.8	M12	M12
160.0	50.0	1LB020-160	3000	102	260	2	44.8	M12	M12
160.0	50.0	1LB020-161	3000	102	260	4	44.8	M12	M12
160.0	50.0	1LB020-174	3000	102	293	2	44.8	M12	M12
160.0	60.0	1LB020-160	3000	102	260	2	44.8	M12	M12
160.0	60.0	1LB020-161	3000	102	260	4	44.8	M12	M12
160.0	60.0	1LB020-174	3000	102	293	2	44.8	M12	M12
200.0	30.0	1LB020-202	3000	102	260	2	44.8	M12	M12
200.0	30.0	1LB020-204	3000	102	260	4	39.2	M12	M12
200.0	40.0	1LB020-202	3000	102	260	2	44.8	M12	M12
200.0	40.0	1LB020-204	3000	102	260	4	39.2	M12	M12
200.0	50.0	1LB020-202	3000	102	260	2	44.8	M12	M12
200.0	50.0	1LB020-204	3000	102	260	4	39.2	M12	M12
200.0	60.0	1LB020-202	3000	102	260	2	44.8	M12	M12
200.0	60.0	1LB020-204	3000	102	260	4	39.2	M12	M12
250.0	30.0	1LB020-209	3000	102	400	2	44.8	M12	M12
250.0	40.0	1LB020-209	3000	102	400	2	44.8	M12	M12
250.0	50.0	1LB020-209	3000	102	400	2	44.8	M12	M12
250.0	60.0	1LB020-209	3000	102	400	2	44.8	M12	M12
1,5“	30.0	1LB020-045	850	85	160	1	27.5	M10	M10
1,5“	40.0	1LB020-045	850	85	160	1	27.5	M10	M10
1,5“	30.0	1LB020-012	2000	92	136	2	34.4	M10	M10
1,5“	40.0	1LB020-012	2000	92	136	2	34.4	M10	M10
2“	30.0	1LB020-011	1350	85	136	1	39.2	M10	M10
2“	40.0	1LB020-011	1350	85	136	1	39.2	M10	M10
2“	30.0	1LB020-010	2000	92	136	2	34.4	M10	M10
2“	40.0	1LB020-010	2000	92	136	2	34.4	M10	M10
2“	50.0	1LB020-009	2000	102	177	2	34.4	M10	M12
2“	60.0	1LB020-009	2000	102	177	2	34.4	M10	M12
2,5“	30.0	1LB020-070	2000	106	189	2	44.8	M12	M10

AL-90°-Expansion-Connector

Tube-Stud

Dimension of Conductor		Code	Technical Dates of Connector						
			Max. Current	C	D	Currentbridge ØE		Bolt Dimension	
ØA	ØB					Pcs.	Max.	ØA	ØB
2,5″	40.0	1LB020-070	2000	106	189	2	44.8	M12	M10
3″	50.0	1LB020-118	3000	102	200	2	44.8	M12	M10
3,5″	30.0	1LB020-121	2000	107	190	2	34.4	M12	M10
3,5″	30.0	1LB020-127	2000	107	210	2	39.2	M12	M10
3,5″	40.0	1LB020-121	2000	107	190	2	34.4	M12	M10
3,5″	40.0	1LB020-127	2000	107	210	2	39.2	M12	M10
3,5″	50.0	1LB020-122	2300	102	203	2	34.4	M12	M12
3,5″	60.0	1LB020-122	2300	102	203	2	34.4	M12	M12
5″	30.0	1LB020-143	3000	102	240	2	44.8	M12	M12
5″	30.0	1LB020-142	3000	102	248	2	44.8	M12	M12
5″	40.0	1LB020-143	3000	102	240	2	44.8	M12	M12
5″	40.0	1LB020-142	3000	102	248	2	44.8	M12	M12
5″	40.0	1LB020-141	3200	142	330	4	39.2	M12	M12
5″	50.0	1LB020-143	3000	102	240	2	44.8	M12	M12
5″	50.0	1LB020-142	3000	102	248	2	44.8	M12	M12
5″	50.0	1LB020-141	3200	142	330	4	39.2	M12	M12

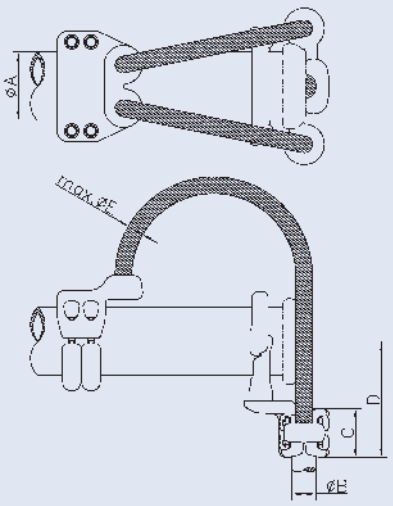

AL-Angle-Expansion-Bus-Support-Coupler

Tube-Tube

Dim. of Cond	Code	Technical Dates of Connector												
		B	α	Bolt dim.	Baseplate							Currentbridge		
					Dimension			Drillingplan				ØG		Max. Curr.
ØA				ØA	ØC	ØD	E	Pcs.	ØF	±β	γ	Pc.	Max.	
120	1KB050-067	130	45°	M12	225	260	12	8	18	5°		2	44.8	3200
160	1KB050-075	150	45°	M12	225	260	12	8	18	5°		2	44.8	3200
200	1KB050-200	180	24°	M12	120	145	16	8	14	5°		2	44.8	3200
200	1KB050-202	200	70°	M12	225	260	15	8	18	5°		4	44.8	6000
250	1KB050-251	225	45°	M12	127	160	15	8	18			2	44.8	3200
250	1KB050-252	225	60°	M12	127	160	15	8	18			2	44.8	3200
3“	1KB050-066	100	45°	M10	127	160	10	8	18			2	34.4	2250
4“	1KB050-120	130	45°	M12	225	260	12	8	18	5°		2	44.8	3200
4,5“	1KB050-120	130	45°	M12	225	260	12	8	18	5°		2	44.8	3200

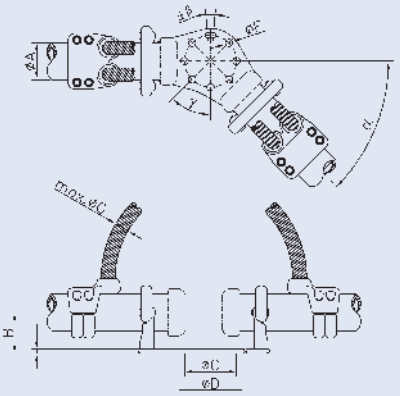

AL-Bus Support

Tube

Dim. of Cond.	Code	Technical Dates of Connector								
		B	Bolt Dim.	Baseplate						
				Dimension			Drillingplan			
ØA			ØA	ØC	ØD	E	Pcs.	ØF	±α	β
40	1JB010-029	100	M10	76	110	8	4	14		45°
40	1JB010-027	60	M10	120	145	8	4	14		45°
40	1JB010-025	100	M10	120	145	8	4	14		45°
50	1JB010-010	70	M10	76	100	10	8	14		
50	1JB010-019	60	M10	120	145	8	4	14		45°
50	1JB010-022	100	M10	120	145	8	8	14		
50	1JB010-020	60	M10	127	160	8	4	18		45°
50	1JB010-028	70	M10	127	160	10	8	18		
63	1JB010-067	70	M10	66	100	10	8	12		
63	1JB010-061	70	M10	76	100	10	4	14		45°
63	1JB010-041	90	M10	120	145	10	4	14		45°
63	1JB010-069	100	M10	120	145	8	8	14		
63	1JB010-039	70	M10	127	160	10	4	18		45°
63	1JB010-047	70	M10	127	160	10	8	18		
63	1JB010-043	90	M10	127	160	10	4	18		
63	1JB010-044	90	M10	127	160	10	8	18		
63	1JB010-046	100	M10	127	160	8	8	18		
80	1JB010-073	100	M10	66	100	10	4	12		
80	1JB010-077	100	M10	66	100	10	8	12		
80	1JB010-075	100	M10	76	100	10	4	14	5°	
80	1JB010-378	90	M10	120	145	8	8	14		
80	1JB010-372	100	M10	120	145	10	4	14		45°
80	1JB010-377	100	M10	120	145	10	8	14		
80	1JB010-374	70	M10	127	160	8	4	18	5°	45°
80	1JB010-376	80	M10	127	160	10	8	18	5°	
80	1JB010-383	100	M10	127	160	10	4	18		45°
80	1JB010-389	100	M10	127	160	10	4	18	5°	
80	1JB010-385	100	M10	127	160	10	8	18		
80	1JB010-371	100	M10	225	260	10	8	18	5°	
100	1JB010-148	100	M10	66	100	10	4	12		45°
100	1JB008-102	100	M10	76	110	10	4	14		
100	1JB008-103	100	M10	76	110	10	8	14		
100	1JB010-155	100	M10	120	145	10	4	14		45°
100	1JB010-187	100	M10	127	160	10	4	18		
100	1JB010-188	100	M10	127	160	10	8	18		
100	1JB008-100	100	M10	127	160	10	8	18	5°	

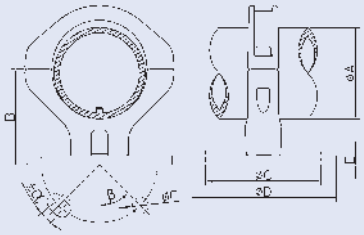

AL-Bus-Support

Tube

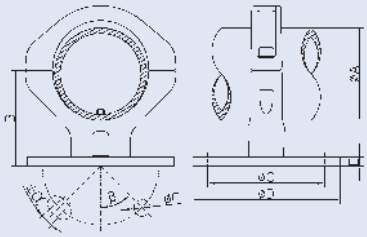

Dim. of Cond.	Code	Technical Dates of Connector								
		B	Bolt Dim.	Baseplate						
				Dimension			Drillingplan			
ØA			ØA	ØC	ØD	E	Pcs.	ØF	±α	β
100	1JB010-154	105	M10	127	160	15	4	18		45°
100	1JB010-401	105	M10	127	160	10	4	18	5°	45°
100	1JB008-101	130	M10	127	160	10	8	18		
100	1JB010-400	120	M10	225	260	10	4	18	5°	45°
120	1JB010-241	130	M10	66	100	10	8	12	5°	
120	1JB008-119	130	M10	76	110	12	8	14		
120	1JB008-128	130	M10	76	110	10	4	18		45°
120	1JB008-117	90	M10	120	145	10	8	14	5°	
120	1JB008-118	130	M10	120	145	10	8	14	5°	
120	1JB008-124	145	M10	120	145	10	8	14	5°	
120	1JB010-489	120	M10	127	160	10	4	18		45°
120	1JB008-126	125	M10	127	160	10	8	18		
120	1JB008-127	130	M10	127	160	10	8	14		
120	1JB008-095	130	M10	127	160	10	8	18	5°	
120	1JB008-145	145	M10	127	160	10	8	18		
120	1JB008-125	160	M10	127	160	10	4	18		45°
120	1JB008-122	180	M10	127	160	10	8	18		
120	1JB008-120	130	M10	225	260	10	8	18	5°	
150	1JB008-153	150	M10	76	100	12	4	14		45°
150	1JB008-151	150	M10	127	160	10	4	18		
150	1JB008-156	150	M10	127	160	12	4	18	5°	45°
150	1JB008-150	150	M10	225	260	10	4	18	5°	45°
160	1JB010-284	155	M10	66	110	12	4	12		
160	1JB008-163	150	M10	76	110	12	4	14		45°
160	1JB008-168	150	M10	120	145	12	4	14		45°
160	1JB010-315	155	M10	120	145	12	4	14		45°
160	1JB008-161	150	M10	127	160	12	4	18		45°
160	1JB008-160	150	M10	127	160	12	4	18	5°	45°
160	1JB008-166	150	M10	127	160	12	8	18		
160	1JB008-159	150	M10	127	160	12	8	18	5°	
160	1JB008-162	155	M10	127	160	12	4	18	5°	45°
160	1JB008-164	150	M10	225	260	12	8	18	5°	

AL-Bus Support

Tube (u-bolted type)

Dim. of Cond.	Code	Technical Dates of Connector								
		B	Bolt Dim.	Baseplate						
				Dimension			Drillingplan			
ØA			ØA	ØC	ØD	E	Pcs.	ØF	±α	β
63	1JB005-061	85	M12	76	100	10	8	13	5°	
63	1JB005-047	85	M12	127	160	10	8	17	5°	
63	1JB005-050	100	M12	127	160	10	8	17	5°	
100	1JB005-100	100	M16	127	160	10	8	17	5°	
120	1JB005-120	130	M16	127	160	10	4	18	15°	45°
140	1JB005-141	140	M16	127	160	10	8	17	5°	
2“	1JB005-061	85	M12	76	100	10	8	13	5°	
2“	1JB005-047	85	M12	127	160	10	8	17	5°	
2“	1JB005-050	100	M12	127	160	10	8	17	5°	
2,5“	1JB005-070	100	M16	76	100	10	4	14	5°	45°
3“	1JB005-089	100	M16	76	100	10	8	13	5°	
3“	1JB005-091	100	M16	127	160	10	8	17	5°	
5“	1JB005-141	140	M16	127	160	10	8	17	5°	

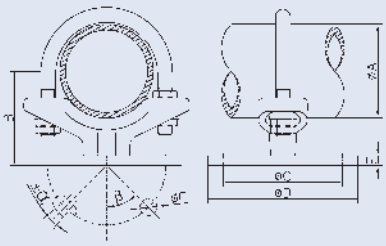

AL-Bus-Support

Tube (sliding)

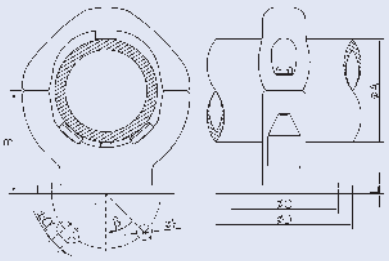

Dim. of Cond.	Code	Technical Dates of Connector								
		B	Bolt Dim.	Baseplate						
				Dimension			Drillingplan			
ØA			ØA	ØC	ØD	E	Pcs.	ØF	±α	β
100	1JB100-043	120	M10	120	145	10	8	14	5°	
100	1JB100-040	120	M10	127	160	10	4	18		45°
120	1JB100-127	125	M10	127	160	15	4	18		45°
120	1JB100-115	125	M10	127	160	12	4	18	5°	45°
120	1JB100-116	130	M10	127	160	10	4	18		45°
120	1JB100-120	130	M10	225	260	10	8	18		
150	1JB100-150	150	M12	76	100	15	4	14		45°
160	1JB100-158	150	M12	120	145	10	4	14	5°	45°
160	1JB100-156	140	M12	127	160	10	4	14	5°	45°
160	1JB100-044	150	M12	127	160	10	4	18		45°
160	1JB100-171	150	M12	225	260	10	8	18		
3,5“	1JB100-043	120	M10	120	145	10	8	14	5°	
3,5“	1JB100-040	120	M10	127	160	10	4	18		45°

AL-Bus Support

Tube (roller bearing)

Dim. of Cond.	Code	Technical Dates of Connector								
		B	Bolt Dim.	Baseplate						Figur
				Dimension		Drillingplan				
ØA			ØA	ØC	D	Pcs.	ØE	±α	β	
80	1JB305-080	120	M10	120	10	4	14	5°	45°	1
80	1JB305-081	120	M10	120	10	4	14	5°	45°	2
100	1JB305-080	120	M10	120	10	4	14	5°	45°	1
100	1JB305-081	120	M10	120	10	4	14	5°	45°	2
100	1JB305-101	120	M12	127	10	4	18	5°	45°	1
120	1JB305-120	130	M10	127	10	4	18	5°	45°	1
160	1JB305-160	150	M10	225	10	4	18	5°	45°	1
160	1JB305-161	150	M10	225	10	4	18	5°	45°	2
2,5“	1JB305-080	120	M10	120	10	4	14	5°	45°	1
2,5“	1JB305-081	120	M10	120	10	4	14	5°	45°	2
3“	1JB305-080	120	M10	120	10	4	14	5°	45°	1
3“	1JB305-081	120	M10	120	10	4	14	5°	45°	2
3,5“	1JB305-080	120	M10	120	10	4	14	5°	45°	1
3,5“	1JB305-081	120	M10	120	10	4	14	5°	45°	2
3,5“	1JB305-101	120	M12	127	10	4	18	5°	45°	1

Figur 1

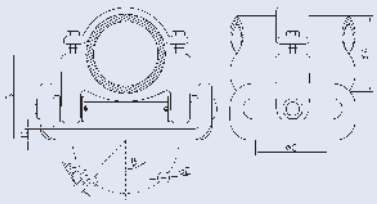

Figur 2

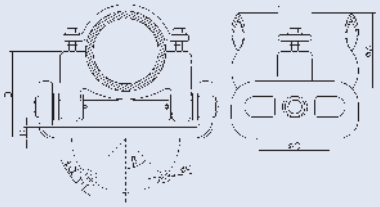

AL-Bus-Support

Tube (fixed with Caps)

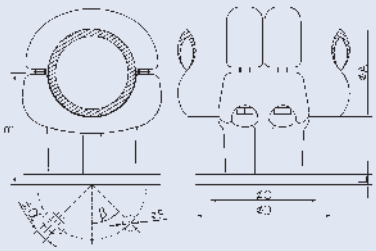

Dim. of Cond.	Code	Technical Dates of Connector								
		B	Bolt Dim.	Baseplate						
				Dimension			Drillingplan			
ØA			ØA	ØC	ØD	E	Pcs.	ØF	±α	β
100	1JB810-101	130	M12	127	160	12	4	12		45°
100	1JB810-100	130	M12	127	160	12	4	18		45°
120	1JB810-121	130	M12	127	160	12	4	18		45°
120	1JB810-122	130	M12	225	260	15	8	18		
140	1JB810-140	140	M12	127	160	12	4	18		45°
140	1JB810-160	150	M12	127	160	12	4	18		45°
140	1JB810-161	160	M12	127	160	12	8	18		
140	1JB810-141	140	M12	225	260	12	8	18	5°	
150	1JB810-140	140	M12	127	160	12	4	18		45°
150	1JB810-160	150	M12	127	160	12	4	18		45°
150	1JB810-161	160	M12	127	160	12	8	18		
150	1JB810-141	140	M12	225	260	12	8	18	5°	
160	1JB810-140	140	M12	127	160	12	4	18		45°
160	1JB810-160	150	M12	127	160	12	4	18		45°
160	1JB810-161	160	M12	127	160	12	8	18		
160	1JB810-141	140	M12	225	260	12	8	18	5°	
3,5“	1JB810-101	130	M12	127	160	12	4	12		45°
3,5“	1JB810-100	130	M12	127	160	12	4	18		45°
4“	1JB810-121	130	M12	127	160	12	4	18		45°
4“	1JB810-122	130	M12	225	260	15	8	18		
4,5“	1JB810-121	130	M12	127	160	12	4	18		45°
4,5“	1JB810-122	130	M12	225	260	12	8	18		
5“	1JB810-140	140	M12	127	160	12	4	18		45°
5“	1JB810-160	150	M12	127	160	12	4	18		45°
5“	1JB810-161	160	M12	127	160	12	8	18		
5“	1JB810-141	140	M12	225	260	12	8	18	5°	

AL-Bus Support

Tube (90°-base plate)

Dim. of Cond.	Code	Technical Dates of Connector								
		B	Bolt Dim.	Baseplate						
				Dimension			Drillingplan			
ØA			ØA	ØC	ØD	E	Pcs.	ØF	±α	β
63	1JC320-066	70	M10	76	100	10	4	14		45°
120	1JC320-123	130	M10	127	160	12	4	18		45°
160	1JC320-165	150	M12	76	100	12	4	14		
160	1JC320-161	160	M12	127	160	12	8	18		
2“	1JC320-066	70	M10	76	100	10	4	14		45°

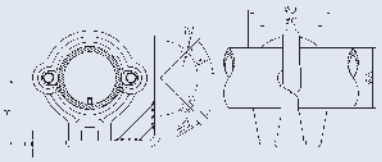

80	1JC400-081	100	M10	76	110	12	4	14		
80	1JC400-080	115	M10	120	145	10	8	14		
100	1JC400-100	100	M10	76	110	12	4	14		
100	1JC400-101	115	M10	127	160	12	4	18		45°
120	1JC400-120	130	M10	127	160	12	4	18		45°
120	1JC400-163	155	M10	225	260	12	8	18		
160	1JC400-166	150	M10	66	110	15	8	12		
160	1JC400-162	150	M12	120	145	15	8	14		
3,5“	1JC400-100	100	M10	76	110	12	4	14		
3,5“	1JC400-101	115	M10	127	160	12	4	18		45°
4“	1JC400-114	120	M10	127	160	12	4	18		45°

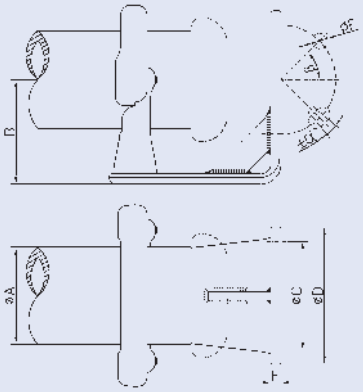

AL-Bus-Support

Tube-Tube

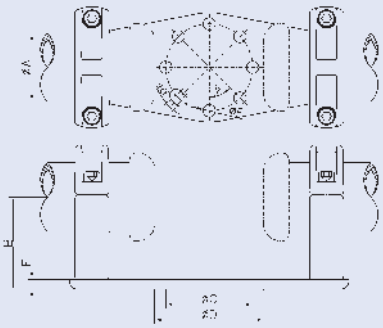

Dim. of Cond.	Code	Technical Dates of Connector									
		B	C	Bolt Dim.	Baseplate						
					Dimension			Drillingplan			
ØA				ØA	ØD	ØE	F	Pcs.	ØG	±α	β
50	1JJ010-034	70	240	M10	127	160	10	8	18	5°	
63	1JJ010-035	70	240	M10	127	160	10	8	18	5°	
80	1JJ010-043	100	320	M10	76	100	10	4	14	5°	45°
80	1JJ010-045	100	240	M10	120	145	10	4	14	5°	45°
80	1JJ010-044	100	240	M10	127	160	10	4	18		45°
80	1JJ010-041	100	244	M10	127	160	10	8	18	5°	
100	1JJ010-052	100	240	M10	127	160	10	4	18		45°
120	1JJ008-122	130	320	M10	120	145	10	8	14	5°	
120	1JJ008-120	120	320	M10	127	160	12	8	18	5°	
120	1JJ010-059	130	240	M10	127	160	12	8	18	5°	
120	1JJ010-064	115	320	M10	225	260	12	8	18	5°	
120	1JJ010-055	130	320	M10	225	260	12	8	18	5°	
150	1JJ008-152	150	240	M10	76	100	12	4	14		45°
150	1JJ008-150	150	240	M10	127	160	12	8	18	5°	
160	1JJ010-160	155	320	M12	127	160	12	8	18	5°	
160	1JJ008-161	150	400	M10	225	260	12	4	26		45°
160	1JJ008-162	150	400	M10	225	260	12	4	18	5°	45°
1,5“	1JJ010-034	70	240	M10	127	160	10	8	18	5°	
2“	1JJ010-035	70	240	M10	127	160	10	8	18	5°	
2,5“	1JJ010-039	96	244	M10	127	160	10	8	18	5°	
2,5“	1JJ010-042	100	330	M10	225	260	10	8	18	5°	
3,5“	1JJ010-052	100	240	M10	127	160	10	4	18		45°

AL-Bus Support

Tube-Tube (roller bearing)

Dim. of Cond.	Code	Technical Dates of Connector									
		B	Bolt Dim.	Baseplate							Figur
				Dimension			Drillingplan				
ØA			ØA	ØC	ØD	E	Pcs.	ØF	±α	β	
120	1JJ280-125	150	M12	127	160	15	4	17			1
120	1JJ280-126	150	M12	127	160	15	4	17			2
120	1JJ280-123	150	M12	127	160	15	4	18	5°		1
120	1JJ280-124	160	M12	127	160	15	4	15			1
120	1JJ280-122	160	M12	127	160	15	4	18	5°		1
140	1JJ280-144	140	M12	127	160	15	4	18		45°	1
140	1JJ280-143	140	M12	127	160	15	4	18		45°	2
150	1JJ280-144	140	M12	127	160	15	4	18		45°	1
150	1JJ280-143	140	M12	127	160	15	4	18		45°	2
160	1JJ280-144	140	M12	127	160	15	4	18		45°	1
160	1JJ280-143	140	M12	127	160	15	4	18		45°	2
3“	1JJ280-090	140	M12	127	160	10	4	12			1
4“	1JJ280-125	150	M12	127	160	15	4	17			1
4“	1JJ280-126	150	M12	127	160	15	4	17			2
4“	1JJ280-123	150	M12	127	160	15	4	18	5°		1
4“	1JJ280-124	160	M12	127	160	15	4	15			1
4“	1JJ280-122	160	M12	127	160	15	4	18	5°		1
4,5“	1JJ280-125	150	M12	127	160	15	4	17			1
4,5“	1JJ280-126	150	M12	127	160	15	4	17			2
4,5“	1JJ280-123	150	M12	127	160	15	4	18	5°		1
4,5“	1JJ280-124	160	M12	127	160	15	4	15			1
4,5“	1JJ280-122	160	M12	127	160	15	4	18	5°		1
5“	1JJ280-144	140	M12	127	160	15	4	18		45°	1
5“	1JJ280-143	140	M12	127	160	15	4	18		45°	2

Figur 1

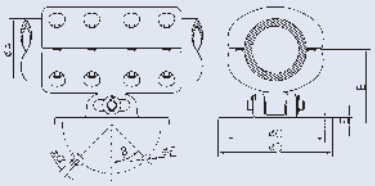

Figur 2

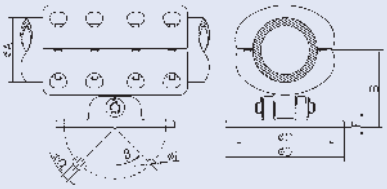

AL-Bus-Support

Tube-Tube (fixed with Caps)

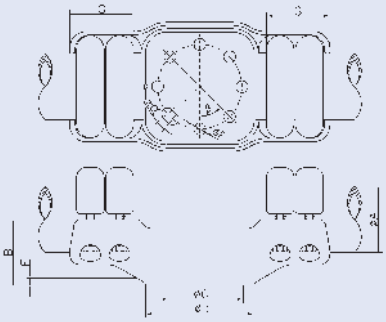

Dim. of Cond.	Code	Technical Dates of Connector										
		Max. Curr.	B	Baseplate							G	Bolt Dim.
				Dimension			Drillingplan					
ØA				ØC	ØD	E	Pcs.	ØF	±α	β		ØA
40	1JJ820-053	1700	60	127	160	25	8	18			95	M10
50	1JJ820-053	1700	60	127	160	25	8	18			95	M10
50	1JJ820-110	2200	85	127	160	15	4	18	5°	45°	99	M10
50	1JJ820-121	2200	90	120	160	20	4	14	5°	45°	99	M10
50	1JJ820-122	2200	65	225	260	12	8	18	5°		95	M10
63	1JJ820-121	2200	90	120	160	20	4	14	5°	45°	99	M10
63	1JJ820-122	2200	65	225	260	12	8	18	5°		95	M10
80	1JJ820-150	2400	100	76	160	20	4	14			90	M12
80	1JJ820-160	2400	100	120	160	20	4	14		45°	90	M12
80	1JJ820-130	2400	80	127	160	15	4	18	5°	45°	90	M12
80	1JJ820-170	2400	100	127	160	20	8	18	5°	45°	90	M12
100	1JJ820-204	2600	100	66	160	25	4	12		45°	96	M12
100	1JJ820-180	2600	100	76	160	25	4	14		45°	96	M12
100	1JJ820-205	2600	120	76	160	25	4	14		45°	96	M12
100	1JJ820-201	2600	100	120	160	25	4	14	5°	45°	96	M12
100	1JJ820-190	2600	90	127	160	15	8	18	5°		96	M12
100	1JJ820-200	2600	100	127	160	25	4	18	5°	45°	96	M12
100	1JJ820-221	2600	100	127	160	25	8	18	5°		96	M12
120	1JJ820-254	3000	130	120	160	25	4	14	5°	45°	91	M12
120	1JJ820-260	3000	130	127	160	25	4	18		45°	97	M12
120	1JJ820-264	3000	130	127	160	25	4	18	5°	45°	97	M12
120	1JJ820-238	3000	130	127	160	25	8	18			97	M12
120	1JJ820-268	3000	145	127	160	40	8	18			97	M12
120	1JJ820-244	3000	150	127	160	25	8	18	5°		90	M12
140	1JJ820-289	4000	140	127	160	25	4	18	5°		117	M12
140	1JJ820-288	4000	140	127	160	25	4	18	5°	45°	117	M12
140	1JJ820-302	4000	140	225	260	25	8	18			117	M12
140	1JJ820-306	4000	145	225	260	25	8	18			117	M12
140	1JJ820-303	4000	155	225	260	40	8	18			117	M12
150	1JJ820-289	4000	140	127	160	25	4	18	5°		117	M12
150	1JJ820-288	4000	140	127	160	25	4	18	5°	45°	117	M12
150	1JJ820-302	4000	140	225	260	25	8	18			117	M12
150	1JJ820-306	4000	145	225	260	25	8	18			117	M12
150	1JJ820-303	4000	155	225	260	40	8	18			117	M12
160	1JJ820-289	4000	140	127	160	25	4	18	5°		117	M12
160	1JJ820-288	4000	140	127	160	25	4	18	5°	45°	117	M12

AL-Bus Support

Tube-Tube (fixed with Caps)

Dim. of Cond.	Code	Technical Dates of Connector										
		Max. Curr.	B	Baseplate							G	Bolt Dim.
				Dimension			Drillingplan					
ØA				ØC	ØD	E	Pcs.	ØF	±α	β		ØA
160	1JJ820-302	4000	140	225	260	25	8	18			117	M12
160	1JJ820-306	4000	145	225	260	25	8	18			117	M12
160	1JJ820-303	4000	155	225	260	40	8	18			117	M12
1,5“	1JJ820-053	1700	60	127	160	25	8	18			95	M10
1,5“	1JJ820-110	2200	85	127	160	15	4	18	5°	45°	99	M10
1,5“	1JJ820-121	2200	90	120	160	20	4	14	5°	45°	99	M10
1,5“	1JJ820-122	2200	65	225	260	12	8	18	5°		95	M10
2“	1JJ820-121	2200	90	120	160	20	4	14	5°	45°	99	M10
2“	1JJ820-122	2200	65	225	260	12	8	18	5°		95	M10
2,5“	1JJ820-150	2400	100	76	160	20	4	14			90	M12
2,5“	1JJ820-160	2400	100	120	160	20	4	14		45°	90	M12
2,5“	1JJ820-130	2400	80	127	160	15	4	18	5°	45°	90	M12
2,5“	1JJ820-170	2400	100	127	160	20	8	18	5°	45°	90	M12
3,5“	1JJ820-204	2600	100	66	160	25	4	12		45°	96	M12
3,5“	1JJ820-180	2600	100	76	160	25	4	14		45°	96	M12
3,5“	1JJ820-205	2600	120	76	160	25	4	14		45°	96	M12
3,5“	1JJ820-201	2600	100	120	160	25	4	14	5°	45°	96	M12
3,5“	1JJ820-190	2600	90	127	160	15	8	18	5°		96	M12
3,5“	1JJ820-200	2600	100	127	160	25	4	18	5°	45°	96	M12
3,5“	1JJ820-221	2600	100	127	160	25	8	18	5°		96	M12
4“	1JJ820-254	3000	130	120	160	25	4	14	5°	45°	91	M12
4“	1JJ820-260	3000	130	127	160	25	4	18		45°	97	M12
4“	1JJ820-264	3000	130	127	160	25	4	18	5°	45°	97	M12
4“	1JJ820-238	3000	130	127	160	25	8	18			97	M12
4“	1JJ820-268	3000	145	127	160	40	8	18			97	M12
4“	1JJ820-244	3000	150	127	160	25	8	18	5°		90	M12
4,5“	1JJ820-254	3000	130	120	160	25	4	14	5°	45°	91	M12
4,5“	1JJ820-260	3000	130	127	160	25	4	18		45°	97	M12
4,5“	1JJ820-264	3000	130	127	160	25	4	18	5°	45°	97	M12
4,5“	1JJ820-238	3000	130	127	160	25	8	18			97	M12
4,5“	1JJ820-268	3000	145	127	160	40	8	18			97	M12
4,5“	1JJ820-244	3000	150	127	160	25	8	18	5°		90	M12
5“	1JJ820-289	4000	140	127	160	25	4	18	5°		117	M12
5“	1JJ820-288	4000	140	127	160	25	4	18	5°	45°	117	M12
5“	1JJ820-302	4000	140	225	260	25	8	18			117	M12
5“	1JJ820-306	4000	145	225	260	25	8	18			117	M12

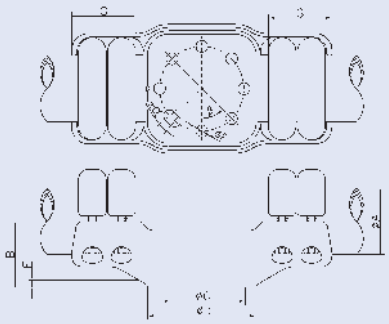

AL-Bus-Support

Tube-Tube (fixed with Cups)

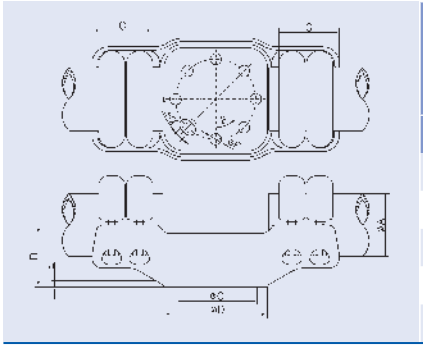

Dim. of Cond.	Code	Technical Dates of Connector										
		Max. Curr.	B	Baseplate							G	Bolt Dim.
				Dimension			Drillingplan					
ØA				ØC	ØD	E	Pcs.	ØF	±α	β		ØA
5″	1JJ820-303	4000	155	225	260	40	8	18			117	M12

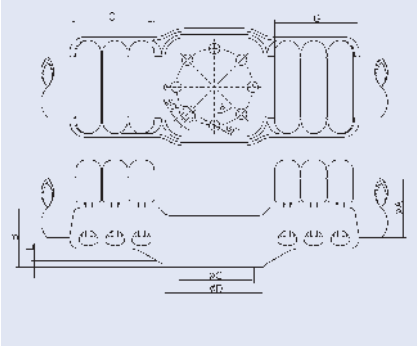

80	1JJ820-141	2500	100	76	160	20	4	14			130	M12
80	1JJ820-175	2500	100	120	160	20	4	14		45°	130	M12
100	1JJ820-206	3200	100	76	160	20	4	14		45°	142	M12
100	1JJ820-240	3600	120	127	160	25	8	18			142	M12
120	1JJ820-267	4000	115	127	160	25	8	18	5°		130	M12
120	1JJ820-270	4000	130	127	160	25	8	18	5°		130	M12
120	1JJ820-263	3600	150	127	160	25	8	18	13°		130	M12
120	1JJ820-261	4000	150	127	160	25	8	18			130	M12
120	1JJ820-269	4000	115	225	260	20	8	18	5°		130	M12
120	1JJ820-276	4000	130	225	260	35	8	18	5°		130	M12
140	1JJ820-291	5000	140	178	215	20	8	18	5°		130	M12
150	1JJ820-291	5000	140	178	215	20	8	18	5°		130	M12
160	1JJ820-291	5000	140	178	215	20	8	18	5°		130	M12
2,5″	1JJ820-141	2500	100	76	160	20	4	14			130	M12
2,5″	1JJ820-175	2500	100	120	160	20	4	14		45°	130	M12
3,5″	1JJ820-206	3200	100	76	160	20	4	14		45°	142	M12
3,5″	1JJ820-240	3600	120	127	160	25	8	18			142	M12
4″	1JJ820-267	4000	115	127	160	25	8	18	5°		130	M12
4″	1JJ820-270	4000	130	127	160	25	8	18	5°		130	M12
4″	1JJ820-263	3600	150	127	160	25	8	18	13°		130	M12
4″	1JJ820-261	4000	150	127	160	25	8	18			130	M12
4″	1JJ820-269	4000	115	225	260	20	8	18	5°		130	M12
4″	1JJ820-276	4000	130	225	260	35	8	18	5°		130	M12
4,5″	1JJ820-267	4000	115	127	160	25	8	18	5°		130	M12
4,5″	1JJ820-270	4000	130	127	160	25	8	18	5°		130	M12
4,5″	1JJ820-263	3600	150	127	160	25	8	18	13°		130	M12
4,5″	1JJ820-261	4000	150	127	160	25	8	18			130	M12
4,5″	1JJ820-269	4000	115	225	260	20	8	18	5°		130	M12
4,5″	1JJ820-276	4000	130	225	260	35	8	18	5°		130	M12
5″	1JJ820-291	5000	140	178	215	20	8	18	5°		130	M12

AL-Disconnector-Countercontact

Tube-Countercontact

Dim. of Cond.		Code	Technical Dates of Connector								
ØA	ØB		Max. Curr.	C	D	E	F	G	Fig	Bolt Dim. ØA	Type of Rope ØB
80	32.2	1NJ100-080J	2080	115	716	200	932		1	M12	Al/St 560/50
100	32.2	1NJ100-105J	2080	135	551	200	770		1	M12	Al/St 560/50
100	32.2	1NJ100-100J	2080	135	611	180	953		1	M12	Al/St 560/50
100	32.2	1NJ100-102J	2080	135	631	180	970		1	M12	Al/St 560/50
120	32.2	1NJ100-114J	2080	150	536	200	755		1	M12	Al/St 560/50
120	32.2	1NJ100-123J	2080	150	566	180	912		1	M12	Al/St 560/50
120	32.2	1NJ200-125J	4160	136	816	200	1000	45	2	M12	Al/St 560/50
120	32.2	1NJ200-126J	4160	145	816	200	1035	62	2	M12	Al/St 560/50
120	38.6	1NJ100-122K	2700	150	511	300	1003		1	M12	Al/St 800/76
140	32.2	1NJ100-124J	2080	170	596	200	990		1	M12	Al/St 560/50
140	32.2	1NJ100-142J	2080	170	641	136	800		1	M12	Al/St 560/50
140	32.2	1NJ100-139J	2080	170	766	200	990		1	M12	Al/St 560/50
140	32.2	1NJ100-160J	2080	170	906	200	1086		1	M12	Al/St 560/50
140	32.2	1NJ100-141J	2080	170	934	136	1086		1	M12	Al/St 560/50
140	32.2	1NJ100-138J	2080	170	981	200	1200		1	M12	Al/St 560/50
140	32.2	1NJ200-140J	4160	160	1016	200	1235	62	2	M12	Al/St 560/50
150	32.2	1NJ100-124J	2080	170	596	200	990		1	M12	Al/St 560/50
150	32.2	1NJ100-142J	2080	170	641	136	800		1	M12	Al/St 560/50
150	32.2	1NJ100-139J	2080	170	766	200	990		1	M12	Al/St 560/50
150	32.2	1NJ100-160J	2080	170	906	200	1086		1	M12	Al/St 560/50
150	32.2	1NJ100-141J	2080	170	934	136	1086		1	M12	Al/St 560/50
150	32.2	1NJ100-138J	2080	170	981	200	1200		1	M12	Al/St 560/50
150	32.2	1NJ200-140J	4160	160	1016	200	1235	62	2	M12	Al/St 560/50
160	32.2	1NJ100-124J	2080	170	596	200	990		1	M12	Al/St 560/50
160	32.2	1NJ100-142J	2080	170	641	136	800		1	M12	Al/St 560/50
160	32.2	1NJ100-139J	2080	170	766	200	990		1	M12	Al/St 560/50
160	32.2	1NJ100-160J	2080	170	906	200	1086		1	M12	Al/St 560/50
160	32.2	1NJ100-141J	2080	170	934	136	1086		1	M12	Al/St 560/50
160	32.2	1NJ100-138J	2080	170	981	200	1200		1	M12	Al/St 560/50
160	32.2	1NJ200-140J	4160	160	1016	200	1235	62	2	M12	Al/St 560/50
200	32.2	1NJ100-200J	2080	185	716	200	930		1	M12	Al/St 560/50
200	32.2	1NJ100-207J	2080	185	731	200	930		1	M12	Al/St 560/50
200	32.2	1NJ100-205J	2080	185	866	200	1080		1	M12	Al/St 560/50
200	32.2	1NJ100-206J	2080	185	896	200	1115		1	M12	Al/St 560/50
200	32.2	1NJ200-200J	4160	185	766	200	980	62	2	M12	Al/St 560/50
200	32.2	1NJ200-190J	4160	185	966	200	1180	62	2	M12	Al/St 560/50
200	32.4	1NJ100-206L	2040	185	896	200	115		1	M12	Al/St 550/70

Figur 1

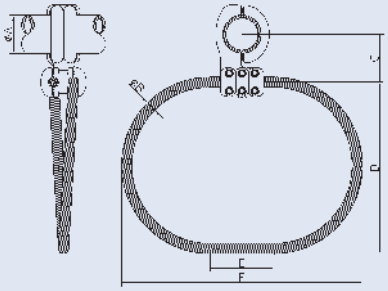

Figur 2

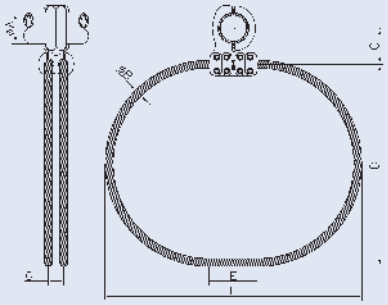

AL-Disconnector-Countercontact

Tube-Countercontact

Figur 1

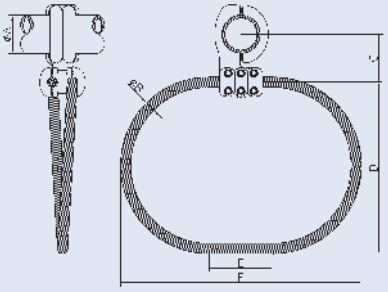

Figur 2

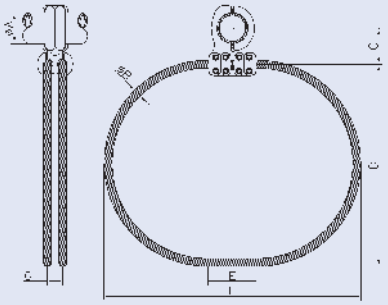

Dim. of Cond.		Code	Technical Dates of Connector								
ØA	ØB		Max. Curr.	C	D	E	F	G	Fig	Bolt Dim. ØA	Type of Rope ØB
250	32.2	1NJ100-152J	2080	212	643	100	850		1	M12	Al/St 560/50
250	32.2	1NJ100-250J	2080	212	656	200	858		1	M12	Al/St 560/50
250	32.2	1NJ100-260J	2080	212	691	200	912		1	M12	Al/St 560/50
250	32.2	1NJ100-262J	2080	212	701	200	910		1	M12	Al/St 560/50
250	32.2	1NJ100-156J	2080	212	934	100	1100		1	M12	Al/St 560/50
250	32.2	1NJ100-259J	2080	212	1426	200	1600		1	M12	Al/St 560/50
250	32.2	1NJ100-263J	2080	215	671	200	1100		1	M12	Al/St 560/50
250	32.2	1NJ200-250J	4160	210	766	200	982	62	2	M12	Al/St 560/50
250	32.4	1NJ100-256L	2040	212	701	200	880		1	M12	Al/St 550/70
250	32.4	1NJ100-254L	2040	212	716	200	933		1	M12	Al/St 550/70
250	32.4	1NJ100-251L	2040	212	771	200	988		1	M12	Al/St 550/70
250	32.4	1NJ100-257L	2040	212	776	200	993		1	M12	Al/St 550/70
250	32.4	1NJ100-258L	2040	212	861	200	1075		1	M12	Al/St 550/70
250	32.4	1NJ100-255L	2040	212	936	200	1153		1	M12	Al/St 550/70
250	32.4	1NJ100-264L	2040	215	851	200	1067		1	M12	Al/St 550/70
250	38.6	1NJ100-250K	2080	212	656	200	858		1	M12	Al/St 800/76
2,5“	32.2	1NJ100-080J	2080	115	716	200	932		1	M12	Al/St 560/50
3,5“	32.2	1NJ100-105J	2080	135	551	200	770		1	M12	Al/St 560/50
3,5“	32.2	1NJ100-100J	2080	135	611	180	953		1	M12	Al/St 560/50
3,5“	32.2	1NJ100-102J	2080	135	631	180	970		1	M12	Al/St 560/50
4“	32.2	1NJ100-114J	2080	150	536	200	755		1	M12	Al/St 560/50
4“	32.2	1NJ100-123J	2080	150	566	180	912		1	M12	Al/St 560/50
4“	32.2	1NJ200-125J	4160	136	816	200	1000	45	2	M12	Al/St 560/50
4“	32.2	1NJ200-126J	4160	145	816	200	1035	62	2	M12	Al/St 560/50
4“	38.6	1NJ100-122K	2700	150	511	300	1003		1	M12	Al/St 800/76
4,5“	32.2	1NJ100-114J	2080	150	536	200	755		1	M12	Al/St 560/50
4,5“	32.2	1NJ100-123J	2080	150	566	180	912		1	M12	Al/St 560/50
4,5“	32.2	1NJ200-125J	4160	136	816	200	1000	45	2	M12	Al/St 560/50
4,5“	32.2	1NJ200-126J	4160	145	816	200	1035	62	2	M12	Al/St 560/50
4,5“	38.6	1NJ100-122K	2700	150	511	300	1003		1	M12	Al/St 800/76
5“	32.2	1NJ100-124J	2080	170	596	200	990		1	M12	Al/St 560/50
5“	32.2	1NJ100-142J	2080	170	641	136	800		1	M12	Al/St 560/50
5“	32.2	1NJ100-139J	2080	170	766	200	990		1	M12	Al/St 560/50
5“	32.2	1NJ100-160J	2080	170	906	200	1086		1	M12	Al/St 560/50
5“	32.2	1NJ100-141J	2080	170	934	136	1086		1	M12	Al/St 560/50
5“	32.2	1NJ100-138J	2080	170	981	200	1200		1	M12	Al/St 560/50
5“	32.2	1NJ200-140J	4160	160	1016	200	1235	62	2	M12	Al/St 560/50

AL-Disconnector-Countercontact

Tube-Countercontact

Dim. of Cond.		Code	Technical Dates of Connector								
ØA	ØB		Max. Curr.	C	D	E	F	G	Fig	Bolt Dim. ØA	Type of Rope ØB
8″	32.2	1NJ100-222J	2080	200	626	200	1050		1	M12	Al/St 560/50
8″	32.2	1NJ100-224J	2080	200	676	200	1090		1	M12	Al/St 560/50
8″	32.2	1NJ200-220J	4160	185	766	200	880	45	2	M12	Al/St 560/50

Figur 1

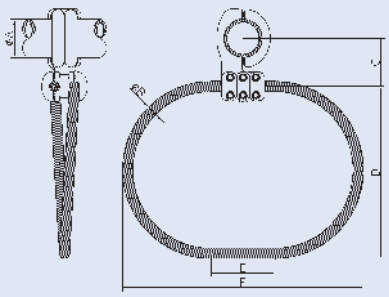

Figur 2

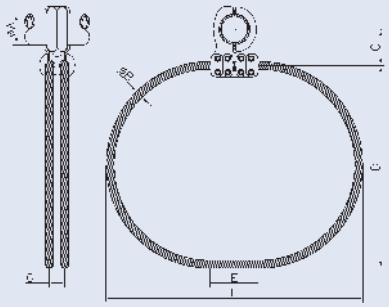

AL-Disconnector-Countercontact

Stud-Conductor

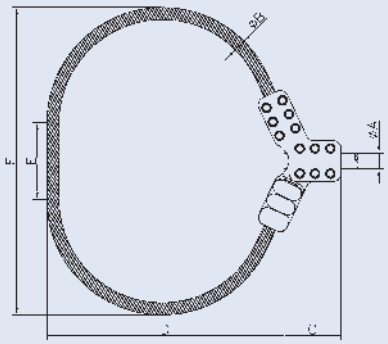

Dim. of Cond.			Code	Technical Dates of Connector						
ØA	ØB			Max. Curr.	C	D	E	F	Bolt Dim. ØA	Type of Robe ØB
	Dim.	Pcs.								
40	30.5	1	1NJ050-057X	2000	143	539		651	M10	Al/St 490/65
40	32.0	1	1NJ050-051H	2000	150	619	200	804	M10	Al/St 537/53
40	32.2	1	1NJ050-051J	2000	150	619	200	804	M10	Al/St 560/50
50	30.5	1	1NJ050-057X	2000	143	539		651	M10	Al/St 490/65
50	32.0	1	1NJ050-051H	2000	150	619	200	804	M10	Al/St 537/53
50	32.2	1	1NJ050-064J	2080	150	770	150	773	M12	Al/St 560/50
50	32.2	1	1NJ050-051J	2000	150	619	200	804	M10	Al/St 560/50
50	32.2	2	1NJ055-063J	1700	91	816	200	1120	M12	Al/St 560/50
60	32.2	1	1NJ050-064J	2080	150	770	150	773	M10	Al/St 560/50
60	32.2	2	1NJ055-063J	1700	91	816	200	1120	M12	Al/St 560/50
70	32.2	2	1NJ055-080J	3200	115	935	200	1032	M12	Al/St 560/50
80	32.2	2	1NJ055-080J	3200	115	935	200	1032	M12	Al/St 560/50

AL-Duplex-Spacer

Conductor

Dim. of Conductor ØA Min.	Dim. of Conductor ØA Max.	Code	Technical Dates of Connector B	Technical Dates of Connector C	Technical Dates of Connector Bolt Dimension
16.3	20.0	1QA110-005	200	52	M10
20.1	21.1	1QA010-030	60	40	M10
20.1	21.1	1QA010-015	80	45	M10
20.1	21.1	1QA010-005	100	45	M10
20.1	21.1	1QA102-019	170	46	M10
20.1	21.1	1QA102-022	200	46	M10
20.1	21.1	1QA102-032	250	46	M10
20.1	21.1	1QA102-023	300	46	M10
20.1	21.1	1QA102-024	400	46	M10
20.1	21.1	1QA102-026	500	46	M10
20.1	21.1	1QA102-028	600	46	M10
20.1	21.1	1QA102-029	900	46	M10
20.1	21.1	1QA102-030	1000	46	M10
21.2	23.4	1QA010-020	45	40	M10
21.2	23.4	1QA010-025	50	42	M10
21.2	23.4	1QA010-030	60	40	M10
21.2	23.4	1QA010-015	80	45	M10
21.2	23.4	1QA010-040	100	55	M10
21.2	23.4	1QA102-019	170	46	M10
21.2	23.4	1QA102-022	200	46	M10
21.2	23.4	1QA102-032	250	46	M10
21.2	23.4	1QA102-023	300	46	M10
21.2	23.4	1QA102-024	400	46	M10
21.2	23.4	1QA102-026	500	46	M10
21.2	23.4	1QA102-028	600	46	M10
21.2	23.4	1QA102-029	900	46	M10
21.2	23.4	1QA102-030	1000	46	M10
23.5	25.7	1QA102-019	170	46	M10
23.5	25.7	1QA102-022	200	46	M10
23.5	25.7	1QA102-032	250	46	M10
23.5	25.7	1QA102-023	300	46	M10
23.5	25.7	1QA102-024	400	46	M10
23.5	25.7	1QA102-026	500	46	M10
23.5	25.7	1QA102-028	600	46	M10
23.5	25.7	1QA102-029	900	46	M10
23.5	25.7	1QA102-030	1000	46	M10
25.8	28.1	1QA010-103	45	42	M10

B ≤ 100

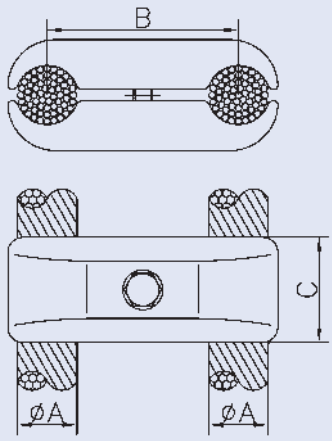

B ≥ 100

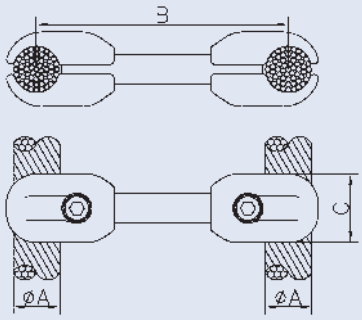

AL-Duplex-Spacer

Conductor

B ≤ 100

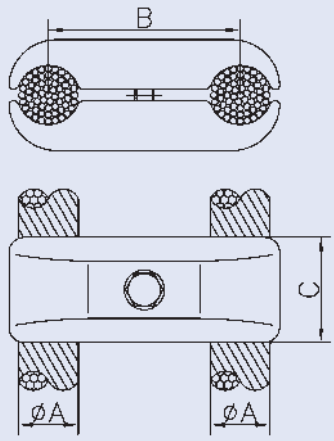

B ≥ 100

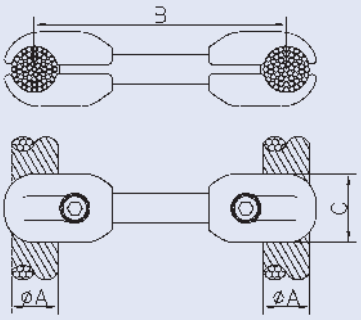

Dim. of Conductor ØA		Code	Technical Dates of Connector		
Min.	Max.		B	C	Bolt Dimension
25.8	28.1	1QA010-105	50	42	M10
25.8	28.1	1QA010-100	52	42	M10
25.8	28.1	1QA010-157	62	42	M10
25.8	28.1	1QA010-120	90	55	M10
25.8	28.1	1QA010-125	100	55	M10
25.8	28.1	1QA102-019	170	46	M10
25.8	28.1	1QA102-022	200	46	M10
25.8	28.1	1QA102-032	250	46	M10
25.8	28.1	1QA102-023	300	46	M10
25.8	28.1	1QA102-024	400	46	M10
25.8	28.1	1QA102-026	500	46	M10
25.8	28.1	1QA102-028	600	46	M10
25.8	28.1	1QA102-029	900	46	M10
25.8	28.1	1QA102-030	1000	46	M10
28.2	29.0	1QA010-103	45	42	M10
28.2	29.0	1QA010-105	50	42	M10
28.2	29.0	1QA010-120	90	55	M10
28.2	29.0	1QA010-130	80	55	M10
28.2	29.0	1QA010-125	100	55	M10
28.2	29.0	1QA102-019	170	46	M10
28.2	29.0	1QA102-022	200	46	M10
28.2	29.0	1QA102-032	250	46	M10
28.2	29.0	1QA102-023	300	46	M10
28.2	29.0	1QA102-024	400	46	M10
28.2	29.0	1QA102-026	500	46	M10
28.2	29.0	1QA102-028	600	46	M10
28.2	29.0	1QA102-029	900	46	M10
28.2	29.0	1QA102-030	1000	46	M10
29.1	29.9	1QA102-019	170	46	M10
29.1	29.9	1QA102-022	200	46	M10
29.1	29.9	1QA102-032	250	46	M10
29.1	29.9	1QA102-023	300	46	M10
29.1	29.9	1QA102-024	400	46	M10
29.1	29.9	1QA102-026	500	46	M10
29.1	29.9	1QA102-028	600	46	M10
29.1	29.9	1QA102-029	900	46	M10
29.1	29.9	1QA102-030	1000	46	M10

AL-Duplex-Spacer

Conductor

Dim. of Conductor ØA Min.	Dim. of Conductor ØA Max.	Code	Technical Dates of Connector B	Technical Dates of Connector C	Technical Dates of Connector Bolt Dimension
30.0	33.0	1QA010-140	45	42	M10
30.0	33.0	1QA010-145	52	42	M10
30.0	33.0	1QA010-150	60	65	M10
30.0	33.0	1QA010-155	62	42	M10
30.0	33.0	1QA010-165	80	55	M10
30.0	33.0	1QA010-160	90	55	M10
30.0	33.0	1QA010-175	100	55	M10
30.0	33.0	1QA102-038	150	46	M10
30.0	33.0	1QA102-040	200	46	M10
30.0	33.0	1QA102-035	250	46	M10
30.0	33.0	1QA102-049	270	46	M10
30.0	33.0	1QA102-054	280	46	M10
30.0	33.0	1QA102-047	300	46	M10
30.0	33.0	1QA102-050	330	46	M10
30.0	33.0	1QA102-052	360	46	M10
30.0	33.0	1QA102-043	400	46	M10
30.0	33.0	1QA102-041	450	46	M10
30.0	33.0	1QA102-044	457	46	M10
30.0	33.0	1QA102-045	500	46	M10
30.0	33.0	1QA102-053	600	46	M10
30.0	33.0	1QA102-051	800	46	M10
33.1	35.0	1QA010-170	90	65	M10
33.1	35.0	1QA010-034	100	55	M10
33.1	35.0	1QA102-038	150	46	M10
33.1	35.0	1QA102-040	200	46	M10
33.1	35.0	1QA102-035	250	46	M10
33.1	35.0	1QA102-049	270	46	M10
33.1	35.0	1QA102-054	280	46	M10
33.1	35.0	1QA102-047	300	46	M10
33.1	35.0	1QA102-050	330	46	M10
33.1	35.0	1QA102-052	360	46	M10
33.1	35.0	1QA102-043	400	46	M10
33.1	35.0	1QA102-041	450	46	M10
33.1	35.0	1QA102-044	457	46	M10
33.1	35.0	1QA102-045	500	46	M10
33.1	35.0	1QA102-053	600	46	M10
33.1	35.0	1QA102-051	800	46	M10

B ≤ 100

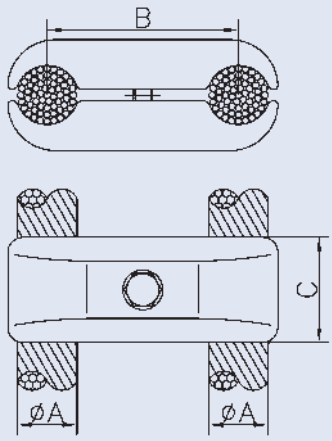

B ≥ 100

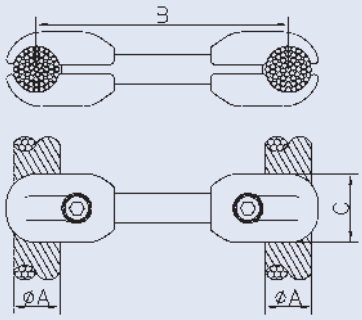

AL-Duplex-Spacer

Conductor

B ≤ 100

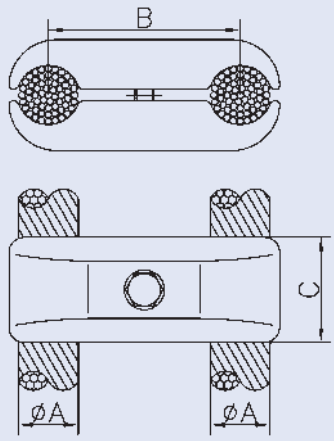

B ≥ 100

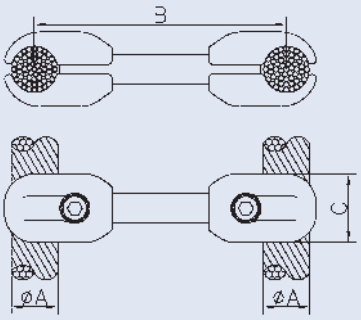

Dim. of Conductor ØA		Code	Technical Dates of Connector		
Min.	Max.		B	C	Bolt Dimension
36.0	39.2	1QA010-185	62	42	M10
36.0	39.2	1QA010-190	80	55	M10
36.0	39.2	1QA010-195	90	55	M10
36.0	39.2	1QA010-200	100	58	M10
36.0	39.2	1QA102-038	150	46	M10
36.0	39.2	1QA102-040	200	46	M10
36.0	39.2	1QA102-035	250	46	M10
36.0	39.2	1QA102-049	270	46	M10
36.0	39.2	1QA102-054	280	46	M10
36.0	39.2	1QA102-047	300	46	M10
36.0	39.2	1QA102-050	330	46	M10
36.0	39.2	1QA102-052	360	46	M10
36.0	39.2	1QA102-043	400	46	M10
36.0	39.2	1QA102-041	450	46	M10
36.0	39.2	1QA102-044	457	46	M10
36.0	39.2	1QA102-045	500	46	M10
36.0	39.2	1QA102-053	600	46	M10
36.0	39.2	1QA102-051	800	46	M10
39.3	39.9	1QA102-038	150	46	M10
39.3	39.9	1QA102-040	200	46	M10
39.3	39.9	1QA102-035	250	46	M10
39.3	39.9	1QA102-049	270	46	M10
39.3	39.9	1QA102-054	280	46	M10
39.3	39.9	1QA102-047	300	46	M10
39.3	39.9	1QA102-050	330	46	M10
39.3	39.9	1QA102-052	360	46	M10
39.3	39.9	1QA102-043	400	46	M10
39.3	39.9	1QA102-041	450	46	M10
39.3	39.9	1QA102-044	457	46	M10
39.3	39.9	1QA102-045	500	46	M10
39.3	39.9	1QA102-053	600	46	M10
39.3	39.9	1QA102-051	800	46	M10
40.0	44.0	1QA010-210	72	55	M10
40.0	44.0	1QA010-215	80	85	M10
40.0	44.0	1QA010-225	90	55	M10
40.0	44.0	1QA010-230	100	55	M10
40.0	44.0	1QA102-038	150	46	M10

AL-Duplex-Spacer

Conductor

Dim. of Conductor ØA Min.	Dim. of Conductor ØA Max.	Code	Technical Dates of Connector B	Technical Dates of Connector C	Technical Dates of Connector Bolt Dimension
40.0	44.0	1QA102-040	200	46	M10
40.0	44.0	1QA102-035	250	46	M10
40.0	44.0	1QA102-049	270	46	M10
40.0	44.0	1QA102-054	280	46	M10
40.0	44.0	1QA102-047	300	46	M10
40.0	44.0	1QA102-050	330	46	M10
40.0	44.0	1QA102-052	360	46	M10
40.0	44.0	1QA102-043	400	46	M10
40.0	44.0	1QA102-041	450	46	M10
40.0	44.0	1QA102-044	457	46	M10
40.0	44.0	1QA102-045	500	46	M10
40.0	44.0	1QA102-053	600	46	M10
40.0	44.0	1QA102-051	800	46	M10
44.1	45.9	1QA110-330	150	65	M10
44.1	45.9	1QA102-056	200	70	M12
44.1	45.9	1QA110-331	250	65	M10
44.1	45.9	1QA110-340	300	65	M10
44.1	45.9	1QA102-059	400	70	M12
44.1	45.9	1QA102-061	450	70	M12
44.1	45.9	1QA110-332	550	65	M10
46.0	52.0	1QA010-046	90	60	M12
46.0	52.0	1QA010-250	100	60	M12
46.0	52.0	1QA110-330	150	65	M10
46.0	52.0	1QA102-056	200	70	M12
46.0	52.0	1QA110-331	250	65	M10
46.0	52.0	1QA110-340	300	65	M10
46.0	52.0	1QA102-059	400	70	M12
46.0	52.0	1QA102-061	450	70	M12
46.0	52.0	1QA110-332	550	65	M10
52.1	59.0	1QA110-355	150	65	M12
52.1	59.0	1QA110-360	200	65	M12
52.1	59.0	1QA110-365	305	65	M12

B ≤ 100

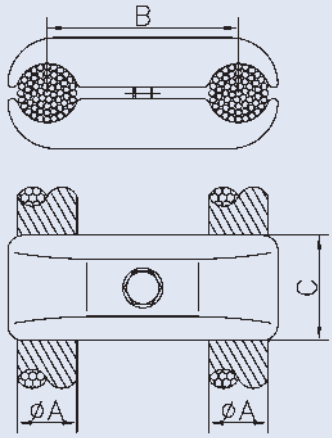

B ≥ 100

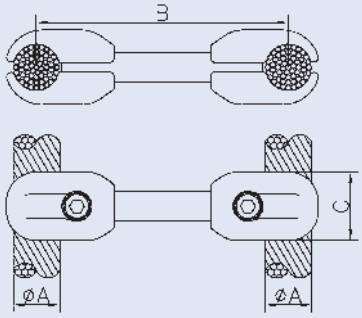

AL-Triplex-Spacer

Conductor

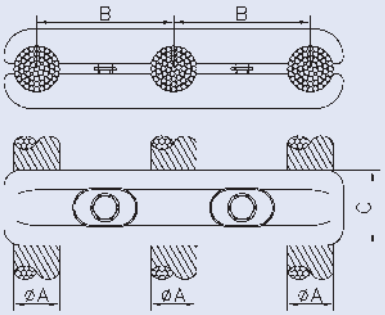

Dim. of Conductor ØA Min.	Dim. of Conductor ØA Max.	Code	Technical Dates of Connector B	Technical Dates of Connector C	Technical Dates of Connector Bolt Dimension
26.0	29.4	1QB010-034	100	55	M10
29.5	33.0	1QB010-035	100	55	M10
29.5	33.0	1QB200-150	150	40	M10
29.5	33.0	1QB200-200	200	40	M10
29.5	33.0	1QB200-225	225	56	M10
33.1	35.9	1QB200-035	100	56	M10
33.1	35.9	1QB200-150	150	40	M10
33.1	35.9	1QB200-200	200	40	M10
33.1	35.9	1QB200-225	225	56	M10
36.0	39.2	1QB010-100	100	55	M10
36.0	39.2	1QB200-150	150	40	M10
36.0	39.2	1QB200-200	200	40	M10
36.0	39.2	1QB200-225	225	56	M10
39.3	42.0	1QB200-035	100	56	M10
39.3	42.0	1QB200-150	150	40	M10
39.3	42.0	1QB200-200	200	40	M10
39.3	42.0	1QB200-225	225	56	M10
42.1	44.0	1QB200-041	200	70	M10

AL-Triplex-Spacer

Conductor

Dim. of Conductor		Code	Technical Dates of Connector		
ØA			B	C	Bolt Dimension
Min.	Max.				
16.0	20.9	1QB520-016	70	38	M10
21.0	24.0	1QB520-016	70	38	M10
21.0	24.0	1QB602-030	200	46	M10
21.0	24.0	1QB602-031	400	46	M10
24.1	29.9	1QB602-030	200	46	M10
24.1	29.9	1QB602-031	400	46	M10
30.0	42.0	1QB520-095	100	38	M10
30.0	42.0	1QB602-035	150	46	M10
30.0	42.0	1QB602-040	200	46	M10
30.0	42.0	1QB602-340	300	46	M10
30.0	42.0	1QB602-330	330	46	M10
30.0	42.0	1QB602-350	350	46	M10
30.0	42.0	1QB602-440	400	46	M10
30.0	42.0	1QB602-456	457	46	M10
42.1	44.0	1QB602-035	150	46	M10
42.1	44.0	1QB602-040	200	46	M10
42.1	44.0	1QB602-340	300	46	M10
42.1	44.0	1QB602-330	330	46	M10
42.1	44.0	1QB602-350	350	46	M10
42.1	44.0	1QB602-440	400	46	M10
42.1	44.0	1QB602-456	457	46	M10
42.1	44.0	1QB602-650	600	70	M12
44.1	51.0	1QB602-650	600	70	M12

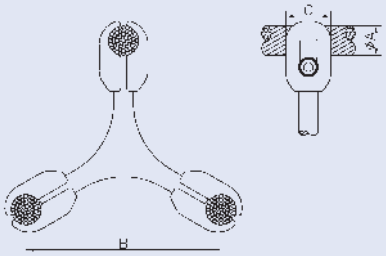

AL-Quadruple-Spacer

Conductor

B ≤ 100

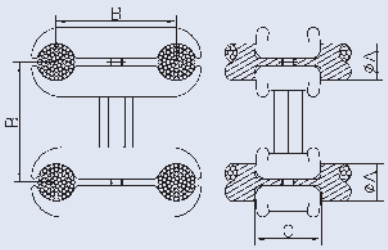

B ≥ 100

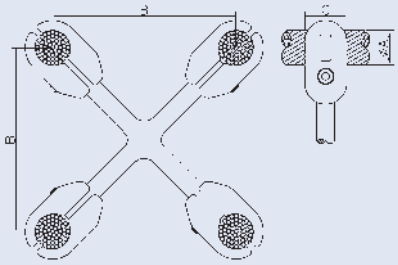

Dim. of Conductor		Code	Technical Dates of Connector		
ØA			B	C	Bolt Dimension
Min.	Max.				
20.1	21.1	1QC510-018	100	45	M10
20.1	21.1	1QC602-041	150	46	M10
20.1	21.1	1QC602-220	200	46	M10
20.1	21.1	1QC602-251	250	46	M10
20.1	21.1	1QC602-440	400	46	M10
21.2	23.4	1QC510-020	50	40	M10
21.2	23.4	1QC510-018	100	45	M10
21.2	23.4	1QC602-041	150	46	M10
21.2	23.4	1QC602-220	200	46	M10
21.2	23.4	1QC602-251	250	46	M10
21.2	23.4	1QC602-440	400	46	M10
23.5	25.7	1QC602-041	150	46	M10
23.5	25.7	1QC602-220	200	46	M10
23.5	25.7	1QC602-251	250	46	M10
23.5	25.7	1QC602-440	400	46	M10
25.8	28.1	1QC510-025	50	42	M10
25.8	28.1	1QC602-041	150	46	M10
25.8	28.1	1QC602-220	200	46	M10
25.8	28.1	1QC602-251	250	46	M10
25.8	28.1	1QC602-440	400	46	M10
28.2	29.9	1QC510-040	80	55	M10
28.2	29.9	1QC602-041	150	46	M10
28.2	29.9	1QC602-220	200	46	M10
28.2	29.9	1QC602-251	250	46	M10
28.2	29.9	1QC602-440	400	46	M10
30.0	33.0	1QC510-040	80	55	M10
30.0	33.0	1QC510-045	90	55	M10
30.0	33.0	1QC510-046	100	55	M10
30.0	33.0	1QC602-040	200	46	M10
30.0	33.0	1QC602-400	400	46	M10
30.0	33.0	1QC602-457	457	46	M10
33.1	35.0	1QC510-090	90	65	M10
33.1	35.0	1QC510-034	100	55	M10
33.1	35.0	1QC602-040	200	46	M10
33.1	35.0	1QC602-400	400	46	M10
33.1	35.0	1QC602-457	457	46	M10
35.1	44.0	1QC602-040	200	46	M10

AL-Quadruple-Spacer

Conductor

Dim. of Conductor		Code	Technical Dates of Connector		
ØA			B	C	Bolt Dimension
Min.	Max.				
35.1	44.0	1QC602-400	400	46	M10
35.1	44.0	1QC602-457	457	46	M10
46.0	50.0	1QC510-100	100	60	M12

B ≤ 100

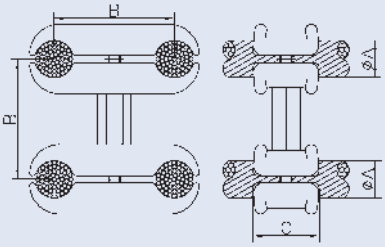

B ≥ 100

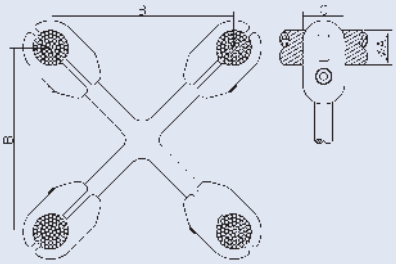

AL-Tube-Endcap

Tube

Dim. of Conductor ØA	Code	Technical Dates of Connector			
		B	C	Bolt Dimension	Figur
50.0	1RB100-005	70	41	M8	2
80.0	1RA100-070	106	33	M8	1
100.0	1RA100-090	126	42	M8	1
100.0	1RA100-100	126	42	M8	2
120.0	1RA100-121	152	42	M10	2
140.0	1RA100-140	174	42	M10	1
150.0	1RA100-151	182	42	M10	1
160.0	1RA100-161	190	42	M10	2
200.0	1RA100-170	240	42	M10	1
250.0	1RA100-190	290	42	M10	1
250.0	1RA100-250	290	42	M10	2
300.0	1RA100-260	340	45	M10	2
2,5“	1RA100-050	96	33	M8	1
3“	1RA100-091	116	40	M8	1
3,5“	1RA100-090	126	42	M8	1
3,5“	1RA100-100	126	42	M8	2
4“	1RA100-114	145	42	M10	1
4“	1RA100-115	145	42	M10	2
4,5“	1RA100-127	155	42	M10	1
5“	1RA100-140	174	42	M10	1
6“	1RA100-168	202	42	M10	1
8“	1RA100-180	253	42	M10	1

Figur 1

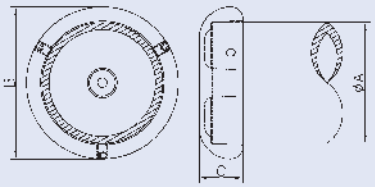

Figur 2

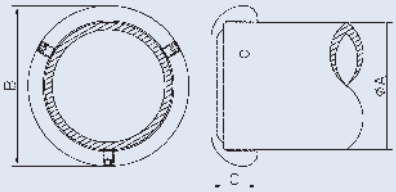

AL-Tube-Endcap

Tube-Conductor

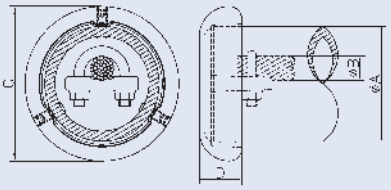

Dimension of Conductor			Code	Technical Dates of Connector			
ØA	ØB			C	D	Bolt Dim.	
	Min.	Max.				ØA	ØB
63	5.0	29.1	1RA800-071	88	34	M8	M12
100	20.0	27.5	1RA900-100	126	42	M8	M10
120	20.0	27.5	1RA900-121	152	42	M10	M10
120	27.5	33.0	1RA900-122	152	42	M10	M10
140	27.5	33.0	1RA900-140	174	42	M10	M10
150	27.5	33.0	1RA910-150	182	42	M10	M10
160	27.5	33.0	1RA900-160	190	42	M10	M10
160	33.1	41.0	1RA900-161	190	42	M10	M10
250	27.5	33.0	1RA900-250	290	42	M10	M10
250	33.1	41.0	1RA900-252	290	42	M10	M10
2“	5.0	29.1	1RA800-071	88	34	M8	M12
3,5“	20.0	27.5	1RA900-100	126	42	M8	M10
4“	20.0	27.5	1RA900-114	152	42	M10	M10
4,5“	20.0	27.5	1RA900-121	152	42	M10	M10
4,5“	27.5	33.0	1RA900-122	152	42	M10	M10
5“	27.5	33.0	1RA900-140	174	42	M10	M10
8“	27.5	33.0	1RA910-220	253	42	M10	M10

AL-Tube-Endcap inside

Tube

Dimension of Conductor			Code	Technical Dates of Connector	
ØA	ØB			C	Bolt Dimension
	Min.	Max.			
40	30	32	1RD100-055	6	M8
50	40	42	1RD100-065	8	M8
63	47	55	1RD100-080	8	M8
80	68	72	1RD100-085	8	M10
100	80	90	1RD100-094	8	M10
120	90	103	1RD100-099	11	M10
120	104	112	1RD100-100	11	M10
140	125	129	1RD100-141	11	M10
160	144	148	1RD100-110	11	M10
200	176	190	1RD100-130	13	M10
1,5“	40.6	40.6	1RD100-065	8	M8
2“	49.0	52.3	1RD100-080	8	M8
2,5“	58.8	63.5	1RD100-082	8	M10
3,5“	85.2	88.9	1RD100-094	8	M10
4“	97.0	101.6	1RD100-099	11	M10
5“	128.6	128.6	1RD100-141	11	M10
6“	155.6	155.6	1RD100-121	11	M10
8“	203.2	203.2	1RD100-220	13	M10

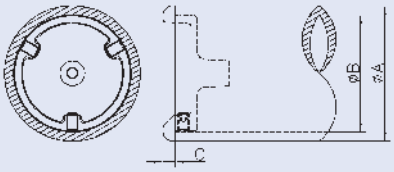

63	47.0	55.0	1RD102-050	23	M10
120	90.0	99.0	1RD102-090	23	M8
120	100.0	108.0	1RD102-120	23	M8
140	120.0	126.0	1RD102-140	23	M10
140	128.0	128.0	1RD102-141	23	M10
2,5“	58.8	63.5	1RD102-060	23	M10
3“	68.0	72.0	1RD102-091	23	M10
3“	73.5	77.7	1RD102-089	23	M10
5“	128.6	128.6	1RD102-141	23	M10

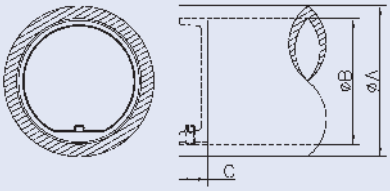

AL-Tube-Endcap inside

Tube-Conductor

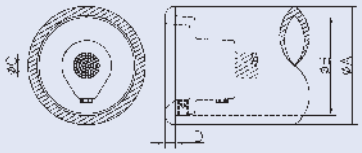

Dimension of Conductor			Code	Technical Dates of Connector				
ØA	ØB			ØC		D	Bolt Dim.	
	Min.	Max.		Min.	Max.		ØA	ØC
40	30.0	32.0	1RD150-040	5.0	13.0	6	M8	M10
63	47.0	55.0	1RD150-063	5.0	12.0	8	M8	M12
63	47.0	55.0	1RD150-064	12.0	28.5	8	M8	M12
80	60.0	72.0	1RD150-082	16.1	33.0	7	M8	M12
120	100.0	110.0	1RD150-120	17.0	37.0	10	M10	M12
160	140.0	150.0	1RD150-160	20.0	37.0	11	M10	M12
2″	49.0	52.3	1RD150-063	5.0	12.0	8	M8	M12
2″	49.0	52.3	1RD150-064	12.0	28.5	8	M8	M12
4,5″	108.9	114.5	1RD150-127	17.0	42.0	10	M10	M12

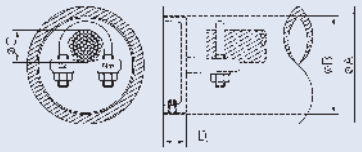

120	94.0	115.0	1RD900-121	20.0	33.0	25	M10	M10
250	236.0	240.0	1RD900-254	20.0	33.0	32	M10	M10
250	236.0	240.0	1RD900-253	33.1	40.0	32	M10	M10
4″	97.0	101.6	1RD900-121	20.0	33.0	25	M10	M10
4,5″	108.9	114.5	1RD900-121	20.0	33.0	25	M10	M10
8″	203.2	203.2	1RD900-220	20.0	33.0	32	M10	M10

Cableholder for Dampingwire

Conductor

Dim. of Conductor ØA		Code	Technical Dates of Connector		
Min.	Max.		B	C	Bolt Dimension
12.0	16.0	1RR100-050	30	50	M10
22.0	33.0	1RR100-030	38	70	M10
33.1	42.0	1RR100-040	38	80	M10
52.1	63.0	1RR100-058	44	100	M12

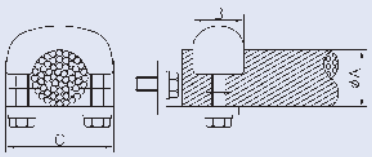

21.0	29.0	5RR050-010	10	60	M10
29.1	34.0	5RR050-030	10	70	M10
34.1	39.0	5RR050-040	10	75	M10

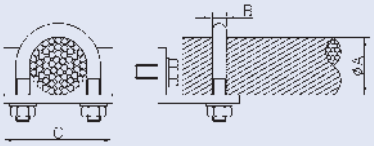

AL-Ice-Holding-Clamp

Tube

Dimension of Conductor ØA	Code	Technical Data of Earthing bolt		
		B	C	Bolt Dimension ØA
120	1TS100-120	174	118	M10
140	1TS100-160	214	118	M10
150	1TS100-160	214	118	M10
160	1TS100-160	214	118	M10
200	1TS100-200	284	118	M10
250	1TS100-250	304	118	M10
4“	1TS100-120	174	118	M10
4,5“	1TS100-120	174	118	M10
5“	1TS100-160	214	118	M10

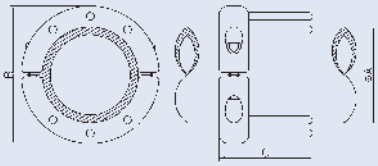

CU-Earthing-Bolt

tinned

Figur 1

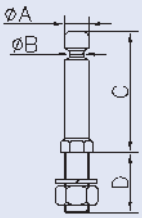

Figur 2

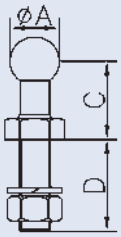

Code	Technical Data of Clamp					
	ØA	ØB	C	D	Bolt Dim.	Figur
3TE190-120	15.9	9	80	40	M12	1
3TE190-121	15.9	9	80	40	M16	1
3TE190-123	20		32	25	M10	2
3TE190-122	20		32	28	M12	2
3TE190-124	20		32	36	M12	2
3TE190-126	25		40	36	M12	2
3TE190-125	25		40	27	M16	2
3TE190-127	25		40	47	M16	2

AL-Straight-Connector

Conductor-Conductor

Dimension of Conductor				Code	Technical Data of Connector					
ØA		ØB			Max. Current	Dim. of Connector			Bolt Dim.	
Min.	Max.	Min.	Max.			D	E	C	ØA	ØB
33,1	42,0	33,1	42,0	1AA010-174	1400	78	127	224	M10	M10
33,1	42,0	42,1	52,0	1AA010-190	1400	78	118	229	M10	M10
33,1	42,0	52,1	63,0	1AA010-184	1400	78	136	250	M10	M12

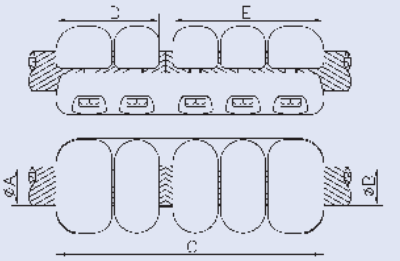

31,5	33,0	31,5	33,0	1AA010-180	1600	106	127	249	M10	M10
33,1	42,0	33,1	42,0	1AA010-081	2000	118	118	275	M10	M10
33,1	42,0	42,1	52,0	1AA010-192	2000	127	118	280	M10	M10

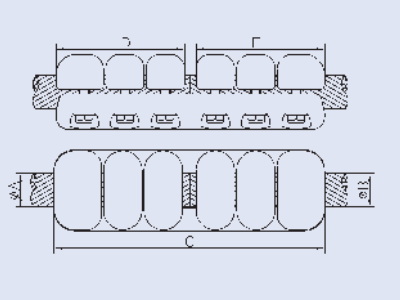

AL-Straight-Connector

Tube-Conductor

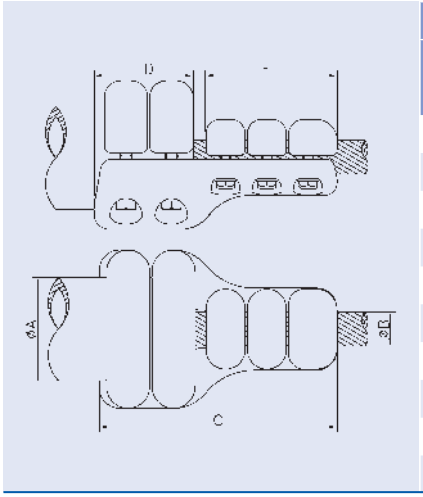

Dim. of Conductor			Code	Technical Data of Connector					
ØA	ØB			Max. Current	Dim. of Connector			Bolt Dim.	
	Min.	Max.			D	E	C	ØA	ØB
80,0	24,1	33,0	1AA010-209	1600	90	127	240	M12	M10
80,0	42,1	52,0	1AA010-197	2500	90	136	248	M12	M10
120,0	33,1	42,0	1AA010-228	2000	90	127	229	M12	M10
120,0	52,1	63,0	1AA010-206	3200	90	136	247	M12	M10
125,0	33,1	42,0	1AA010-228	2000	90	127	229	M12	M10
125,0	52,1	63,0	1AA010-206	3200	90	136	247	M12	M10
150,0	33,1	42,0	1AA010-188	2000	117	118	270	M12	M10
150,0	52,1	63,0	1AA010-233	3200	90	136	255	M12	M10
160,0	33,1	42,0	1AA010-188	2000	117	118	270	M12	M10
160,0	52,1	63,0	1AA010-233	3200	90	136	255	M12	M10

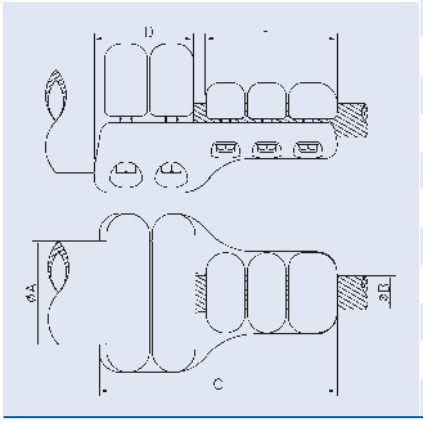

2,5“	24,1	33,0	1AA010-209	1600	90	127	240	M12	M10
2,5“	42,1	52,0	1AA010-197	2500	90	136	248	M12	M10
4“	33,1	42,0	1AA010-228	2000	90	127	229	M12	M10
4“	52,1	63,0	1AA010-206	3200	90	136	247	M12	M10
5“	33,1	42,0	1AA010-188	2000	117	118	270	M12	M10
5“	52,1	63,0	1AA010-233	3200	90	136	255	M12	M10

AL-Straight-Connector

Tube-Conductor

Dim. of Conductor			Code	Technical Data of Connector							
ØA	ØB			Max. Current	Dim. of Connector					Bolt Dim.	
	Min.	Max.			D	E	F	C	G	ØA	ØB
80,0	33,1	42,0	1BA510-122	1600	102	136	120	136	239	M12	M10
100,0	24,1	33,0	1BA510-130	1600	106	136	130	144	255	M12	M10
100,0	33,1	42,0	1BA510-131	2000	106	136	135	144	265	M12	M10
120,0	24,1	33,0	1BA510-140	1600	102	118	135	136	270	M12	M10
140,0	24,1	33,0	1BA510-076	1400	102	136	165	136	317	M12	M10
140,0	33,1	42,0	1BA510-146	2000	102	136	165	150	322	M12	M10
160,0	24,1	33,0	1BA510-076	1400	102	136	165	136	317	M12	M10
160,0	33,1	42,0	1BA510-146	2000	102	136	165	150	322	M12	M10
200,0	33,1	42,0	1BA510-200	2000	106	118	185	142	366	M12	M10
250,0	33,1	42,0	1BA510-175	2000	102	118	215	142	420	M12	M10
2,5“	33,1	42,0	1BA510-122	1600	102	136	120	136	239	M12	M10
3,5“	24,1	33,0	1BA510-130	1600	106	136	130	144	255	M12	M10
3,5“	33,1	42,0	1BA510-131	2000	106	136	135	144	265	M12	M10
4“	24,1	33,0	1BA510-140	1600	102	118	135	136	270	M12	M10
4,5“	24,1	33,0	1BA510-140	1600	102	118	135	136	270	M12	M10
5“	24,1	33,0	1BA510-076	1400	102	136	165	136	317	M12	M10
5“	33,1	42,0	1BA510-146	2000	102	136	165	150	322	M12	M10

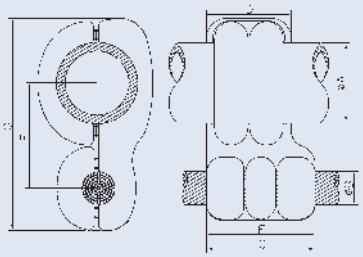

100,0	33,1	42,0	1BA510-132	2000	106	176	135	184	265	M12	M10
140,0	33,1	42,0	1BA510-148	2000	117	176	165	184	327	M12	M10
140,0	52,1	63,0	1BA510-149	3200	102	182	180	218	351	M12	M10
160,0	33,1	42,0	1BA510-148	2000	117	176	165	184	327	M12	M10
160,0	52,1	63,0	1BA510-149	3200	102	182	180	218	351	M12	M10
3,5“	33,1	42,0	1BA510-132	2000	106	176	135	184	265	M12	M10
5“	33,1	42,0	1BA510-148	2000	117	176	165	184	327	M12	M10
5“	52,1	63,0	1BA510-149	3200	102	182	180	218	351	M12	M10

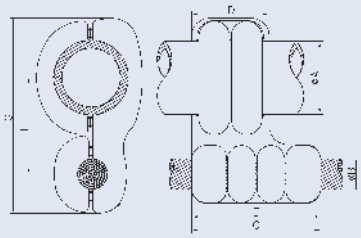

63,0	33,1	42,0	1BA510-118	2000	148	136	108	148	214	M10	M10
63,0	52,1	63,0	1BA510-047	3200	156	197	110	203	228	M10	M10
2“	33,1	42,0	1BA510-118	2000	148	136	108	148	214	M10	M10
2“	52,1	63,0	1BA510-047	3200	156	197	110	203	228	M10	M10

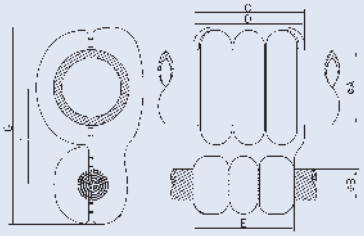

AL-Straight-Connector

Tube-Tube

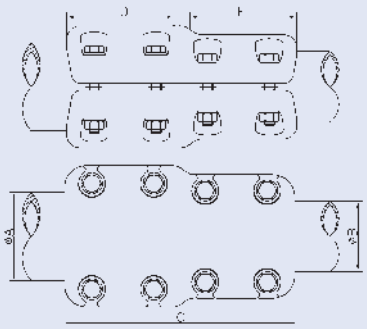

Dim. of Conductor		Code	Technical Data of Connector					
ØA	ØB		Max. Current	Dim. of Connector			Bolt Dim.	
				D	E	C	ØA	ØB
80,0	100,0	1AA101-090	3150	121	121	260	M12	M12
80,0	120,0	1AA101-092	3200	121	121	260	M12	M12
100,0	100,0	1AA100-132	3200	126	126	260	M12	M12
100,0	120,0	1AA101-095	3500	91	90	202	M12	M12
100,0	150,0	1AA101-098	4000	131	130	280	M12	M12
100,0	160,0	1AA101-098	4000	131	130	280	M12	M12
120,0	120,0	1AA100-136	4000	136	136	280	M12	M12
120,0	150,0	1AA101-100	4000	130	140	280	M12	M12
120,0	160,0	1AA101-100	4000	130	140	280	M12	M12
140,0	140,0	1AA100-140	4600	151	151	310	M12	M12
150,0	150,0	1AA100-140	4600	151	151	310	M12	M12
160,0	160,0	1AA100-142	4600	151	151	310	M12	M12
160,0	200,0	1AA101-150	5000	142	144	296	M12	M12
170,0	170,0	1AA100-144	4600	151	151	310	M12	M12
200,0	200,0	1AA100-150	6000	182	182	380	M12	M12
250,0	250,0	1AA100-170	8000	192	192	400	M12	M12

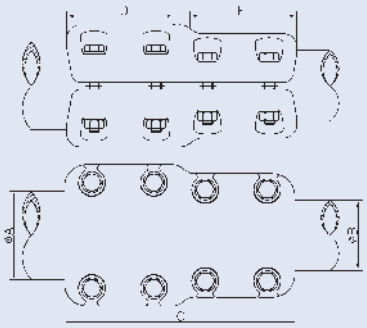

3″	3″	1AA100-090	3150	121	121	260	M12	M12
3,5″	3,5	1AA100-132	3200	126	126	260	M12	M12
3,5″	4″	1AA101-095	3500	91	90	202	M12	M12
3,5″	4,5″	1AA101-095	3500	91	90	202	M12	M12
4,5″	4,5″	1AA100-136	4000	136	136	280	M12	M12
5″	5″	1AA100-140	4600	151	151	310	M12	M12
6″	6″	1AA100-144	4600	151	151	310	M12	M12

AL-Straight-Terminal

Stud-Conductor

Dim. of Conductor			Code	Technical Data of Connector					
ØA	ØB			Max. Current	Dim. of Connector			Bolt Dim.	
	Min.	Max.			D	E	C	ØA	ØB
30,0	24,1	33,0	1BA010-031	1250	87	87	205	M10	M10
30,0	33,1	42,0	1BA010-031	1250	87	78	205	M10	M10
40,0	24,1	33,0	1BA010-031	1250	87	87	205	M10	M10

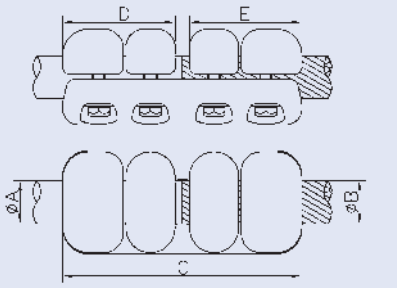

30,0	33,1	42,0	1AA010-174	1400	87	127	224	M10	M10
30,0	42,1	52,0	1AA010-190	1400	87	118	229	M10	M10
30,0	52,1	63,0	1AA010-184	1400	87	136	250	M10	M10
40,0	33,1	42,0	1AA010-174	1400	87	127	224	M10	M10
40,0	42,1	52,0	1AA010-190	1400	87	118	229	M10	M10
40,0	52,1	63,0	1AA010-184	1400	87	136	250	M10	M10

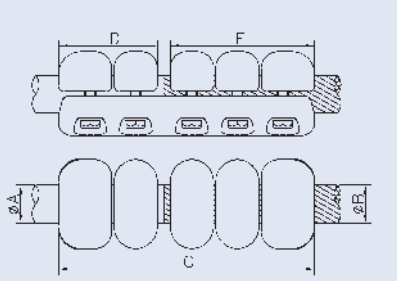

30,0	24,1	33,0	1BA010-106	1600	127	106	248	M10	M10
30,0	33,1	42,0	1BA010-106	1600	115	127	248	M10	M10
30,0	42,1	52,0	1AA010-192	2000	127	118	280	M10	M10
40,0	24,1	33,0	1BA010-106	1600	127	106	248	M10	M10
40,0	33,1	42,0	1AA010-081	2000	127	118	275	M10	M10
40,0	42,1	52,0	1AA010-192	2000	127	118	280	M10	M10
40,0	52,1	63,0	1AA010-104	2300	145	136	290	M10	M10
60,0	42,1	52,0	1AA010-104	2300	145	136	290	M10	M10

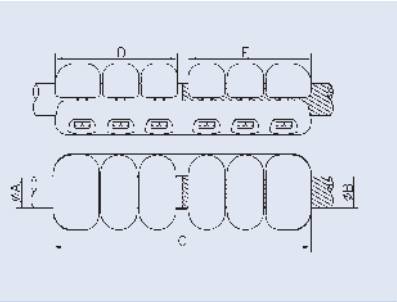

AL-Straight-Flat Terminal

Conductor-Flat Terminal

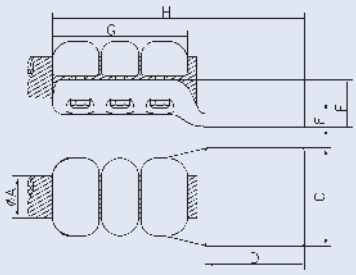

Dim. of Conductor				Code	Technical Data of Connector					
ØA		C	D		Max. Current	Dim. of Connector				Bolt Dim.
Min.	Max.					E	F	G	H	ØA
24,1	31,7	100	100	1CA012-024	1600	15	48	136	253	M10
31,8	33,3	100	100	1CA012-042	1600	15	50	118	253	M10
31,8	33,3	120	120	1CA012-044	2000	15	50	118	273	M10
33,4	35,7	100	100	1CA012-042	1600	15	50	118	253	M10
33,4	35,7	120	120	1CA012-044	2000	15	50	118	273	M10
35,8	37,2	40	40	1CA012-244F	600	17	56	118	196	M10
35,8	37,2	60	60	1CA012-248F	1250	17	56	118	216	M10
35,8	37,2	75	75	1CA012-256F	1500	17	56	118	231	M10
35,8	37,2	100	100	1CA012-056F	1600	17	56	118	256	M10
35,8	37,2	120	120	1CA012-044	2000	15	50	118	273	M10
37,3	39,1	40	40	1CA012-244F	600	17	56	118	196	M10
37,3	39,1	60	60	1CA012-248F	1250	17	56	118	216	M10
37,3	39,1	75	75	1CA012-062F	1600	17	56	118	231	M10
37,3	39,1	80	80	1CA012-064F	1600	16	56	118	236	M10
37,3	39,1	100	100	1CA012-070F	1600	16	56	118	256	M10
37,3	39,1	120	120	1CA012-044	2000	15	50	118	273	M10
39,2	42,0	40	40	1CA012-244F	600	17	56	118	196	M10
39,2	42,0	60	60	1CA012-248F	1250	17	56	118	216	M10
39,2	42,0	75	75	1CA012-062	1600	17	56	118	231	M10
39,2	42,0	80	80	1CA012-064	1600	16	56	118	236	M10
39,2	42,0	100	100	1CA012-070	1600	16	56	118	256	M10
39,2	42,0	120	120	1CA012-044	2000	15	50	118	273	M10
42,1	44,0	75	75	1CA012-063	1600	16	56	118	231	M10
42,1	44,0	80	80	1CA012-065	1600	16	56	118	236	M10
42,1	44,0	100	100	1CA012-071	1600	16	56	118	256	M10
42,1	44,0	125	125	1CA012-080	2000	20	60	118	279	M10
44,1	52,0	125	125	1CA012-090	2500	28	80	118	273	M10
52,1	63,0	80	80	1CA012-053	2000	25	63	136	243	M10
52,1	63,0	100	100	1CA012-106	2500	30	75	136	276	M10
52,1	63,0	125	125	1CA012-110	3200	30	75	136	296	M10

AL-Straight-Flat Terminal

Conductor-Flat terminal

Dim. of Conductor					Code	Technical Data of Connector					
ØA			C	D		Max. Current	Dim. of Connector				Bolt Dim. ØA
Min.	Max.	Caps					E	F	G	H	
33,1	42,0	3	127	170	1CA018-140	1800	15	60	127	315	M10
52,1	63,0	3	127	160	1CA018-061	2500	20	75	136	350	M12
52,1	63,0	4	178	215	1CA018-161	2900	20	60	182	428	M12
52,1	63,0	4	225	260	1CA018-162	2000	20	60	182	480	M12
114,0	127,0	2	127	160	1CA018-127	2500	20	130	78	281	M12

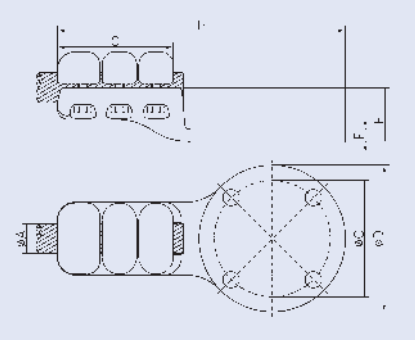

AL-Straight-Flat Terminal

Tube-Flat Terminal

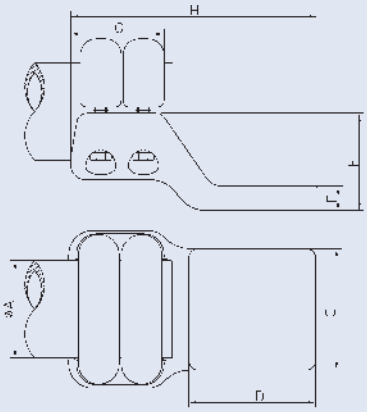

Dim. of Conductor			Code	Technical Data of Connector					
ØA	C	D		Max. Current	Dim. of Connector				Bolt Dim.
					E	F	G	H	ØA
80,0	100	100	1CA012-081	2400	25	90	101	238	M12
80,0	125	125	1CA012-124	2400	25	100	90	241	M12
80,0	200	100	1CA012-126	2400	20	100	90	327	M12
100,0	125	125	1CA012-134	2600	25	93	96	245	M12
120,0	125	125	1CA012-152	3000	30	130	90	242	M12
120,0	200	100	1CA012-159	3000	30	130	90	210	M12
140,0	100	100	1CA012-171	3150	30	140	90	214	M12
140,0	125	125	1CA012-174	3200	30	127	90	228	M12
140,0	200	100	1CA012-185	4000	25	150	90	220	M12
150,0	100	100	1CA012-171	3150	30	140	90	214	M12
150,0	125	125	1CA012-174	3200	30	127	90	228	M12
150,0	200	100	1CA012-185	4000	25	150	90	220	M12
160,0	100	100	1CA012-171	3150	30	140	90	214	M12
160,0	125	125	1CA012-174	3200	30	130	90	228	M12
160,0	200	100	1CA012-185	4000	25	150	90	220	M12
200,0	200	100	1CA012-199	4000	25	180	96	215	M12
250,0	100	100	1CA012-250	3150	30	225	90	218	M12
3,5“	125	125	1CA012-134	2600	25	93	96	245	M12
4“	125	125	1CA012-152	3000	30	130	90	242	M12
4“	200	100	1CA012-159	3000	30	130	90	210	M12
4,5“	125	125	1CA012-152	3000	30	130	90	242	M12
4,5“	200	100	1CA012-159	3000	30	130	90	210	M12
5“	100	100	1CA012-171	3150	30	140	90	214	M12
5“	125	125	1CA012-174	3200	30	127	90	228	M12
5“	200	100	1CA012-185	4000	25	150	90	220	M12

AL-Straight-Flat Terminal

Tube-Flat Terminal

Dim. of Conductor			Code	Technical Data of Connector					
				Max. Current	Dim. of Connector				Bolt Dim.
ØA	C	D			E	F	G	H	ØA
63,0	80,0	80,0	1CA012-053	2000	25	74	136	243	M12
63,0	100,0	100,0	1CA012-106	2500	30	75	136	276	M12
63,0	125,0	125,0	1CA012-110	3200	30	75	136	296	M12
100,0	125	125	1CA012-137	3200	25	130	140	298	M12
120,0	100	100	1CA012-160	3150	30	108	130	260	M12
120,0	200	100	1CA012-167	4000	30	130	130	246	M12
140,0	200	100	1CA012-192	4000	26	130	137	243	M12
150,0	200	100	1CA012-192	4000	26	130	140	243	M12
160,0	200	100	1CA012-192	4000	26	130	140	243	M12
2“	80	80	1CA012-053	2000	25	74	136	243	M12
2“	100	100	1CA012-106	2500	30	75	136	276	M12
2“	125	125	1CA012-110	3200	30	75	136	296	M12
3,5“	125	125	1CA012-137	3200	25	130	140	298	M12
4“	100	100	1CA012-160	3150	30	108	130	260	M12
4“	200	100	1CA012-167	4000	30	130	130	246	M12
4,5“	100	100	1CA012-160	3150	30	108	130	260	M12
4,5“	200	100	1CA012-167	4000	30	130	130	246	M12
5“	200	100	1CA012-192	4000	26	130	137	243	M12

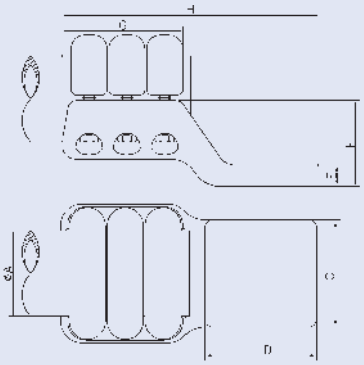

AL-Straight-Flat Terminal

Stud-Flat Terminal

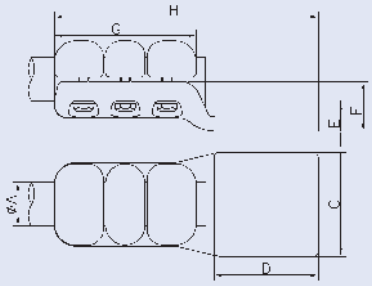

Dim. of Conductor			Code	Technical Data of Connector					
ØA	C	D		Max. Current	Dim. of Connector				Bolt Dim.
					E	F	G	H	ØA
30,0	100	100	1CA012-024	1600	15	48	136	253	M10
30,0	125	125	1CA012-048	2000	20	60	118	279	M10
40,0	40	40	1CA012-244F	600	17	56	118	196	M10
40,0	60	60	1CA012-248F	1250	17	56	118	216	M10
40,0	75	75	1CA012-062	1600	17	56	118	231	M10
40,0	80	80	1CA012-064	1600	16	56	118	236	M10
40,0	100	100	1CA012-070	1600	16	56	118	256	M10
40,0	120	120	1CA012-044	2000	15	50	118	273	M10
50,0	80	80	1CA012-053	2000	25	64	136	243	M10
50,0	100	100	1CA012-106	2500	30	75	136	276	M10
50,0	125	125	1CA012-110	3200	30	75	136	296	M10
60,0	80	80	1CA012-053	2000	25	64	136	243	M10
60,0	100	100	1CA012-106	2500	30	75	136	276	M10
60,0	125	125	1CA012-110	3200	30	75	136	296	M10

AL-Straight-Welded-Connector

Tube-Tube

Dimension of Conductor						Code	Dim. of Connector
ØA	ØB		ØC	ØD			
	Min.	Max.		Min.	Max.		D
60,0	44,0	52,0	60,0	44,0	52,0	1AA200-060	80
80,0	64,0	64,0	60,0	64,0	64,0	1AA200-079	100
80,0	60,0	60,0	80,0	60,0	60,0	1AA200-080	100
100,0	80,0	80,0	100,0	80,0	80,0	1AA200-029	130
120,0	100,0	100,0	120,0	100,0	100,0	1AA210-100	160
120,0	104,0	104,0	120,0	104,0	104,0	1AA210-120	160
140,0	126,0	128,0	140,0	126,0	128,0	1AA210-142	200
160,0	140,0	144,0	140,0	126,0	128,0	1AA201-140	65
160,0	140,0	144,0	160,0	140,0	144,0	1AA210-160	180
200,0	180,0	184,0	200,0	180,0	184,0	1AA210-200	200
250,0	226,0	234,0	250,0	226,0	234,0	1AA210-250	200
250,0	236,0	240,0	250,0	236,0	240,0	1AA210-251	200
300,0	268,0	276,0	300,0	268,0	276,0	1AA210-201	200

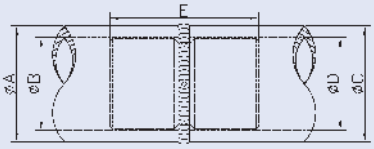

2“	44,0	52,0	2“	44,0	52,0	1AA200-060	80
3“	73,5	73,5	3“	73,5	73,5	1AA210-089	130
3“	77,7	77,7	3“	77,7	77,7	1AA210-088	130
4“	101,6	101,6	4“	101,6	101,6	1AA210-120	160
5“	128,6	128,6	5“	128,6	128,6	1AA210-142	200
6“	146,3	146,3	6“	146,3	146,3	1AA210-168	180

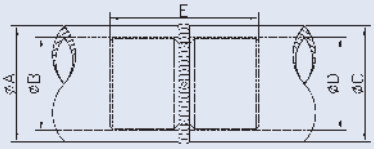

AL-Straight-Welded-Flat Terminal

Tube-Flat Terminal

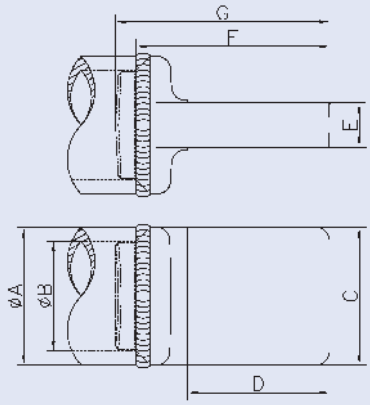

Dimension of Conductor					Code	Techn. Data of Connector			
ØA	ØB		C	D		Max. Current	Dim. of Connector		
	Min.	Max.					E	F	G
120,0	100,0	100,0	100,0	100,0	1CA084-121	2000	20	137	150
120,0	101,0	104,0	100,0	100,0	1CA084-122	2000	20	135	150
120,0	105,0	110,0	100,0	100,0	1CA084-120	2000	20	137	150
140,0	122,0	122,0	100,0	100,0	1CA084-141	3000	30	147	160
140,0	122,0	128,0	125,0	100,0	1CA084-143	3000	30	132	145
140,0	122,0	128,0	150,0	150,0	1CA084-142	3100	35	182	195
160,0	140,0	144,0	100,0	100,0	1CA084-163	2500	25	134	150
160,0	145,0	150,0	100,0	100,0	1CA084-161	2500	30	131	150
160,0	140,0	144,0	125,0	125,0	1CA084-160	4000	35	159	175
160,0	140,0	144,0	200,0	100,0	1CA084-162	4000	35	130	146
200,0	180,0	180,0	200,0	100,0	1CA084-202	6000	35	142	155
200,0	180,0	184,0	200,0	100,0	1CA084-200	6000	35	139	155
300,0	268,0	280,0	300,0	100,0	1CA084-201	9000	45	143	160

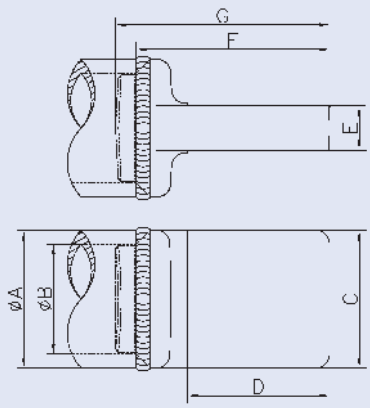

5″	122,0	123,0	100,0	100,0	1CA084-141	3000	30	147	160
5″	122,0	129,0	150,0	100,0	1CA084-143	3000	30	132	145
5″	122,0	129,0	150,0	150,0	1CA084-142	3100	35	182	195

AL-Suspension-Connector

Conductor

Dim. of Conductor ØA		Code	Technical Data of Connector						
			Dimension of Connector			Bolt Dim.	Suspension		
Min.	Max.		B	C	D	ØA	Bolt. Dim.	Figur	E
33,1	42,0	1SA100-046	136	90	73	M10	Ø19	1	
33,1	42,0	1SA100-051	136	90	73	M10	Ø22	1	
52,1	63,0	1SA100-060	160	118	90	M10	Ø19	1	
140,0	160,0	1SA100-142	102	224	140	M12	Ø19	2	18

Figur 1

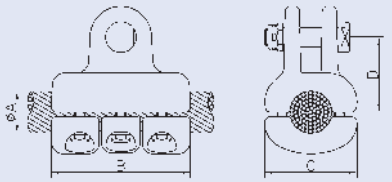

Figur 2

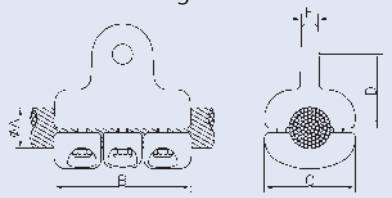

AL-Parallel-Groove-Clamp

Conductor-Conductor

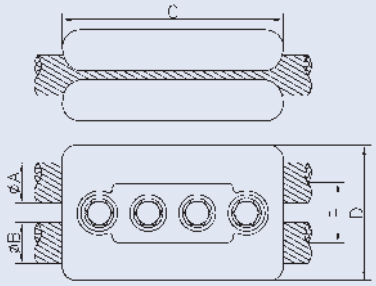

Dimension of Conductor				Code	Technical Data of Connector					
ØA		ØB			Max. Current	Dim. of Connector			Bolts	
Min.	Max.	Min.	Max.			D	E	C	Dim.	Pcs.
24,0	32,9	24,0	32,9	1PA100-380	1060	136	98	52	M12	3
33,0	36,0	33,0	36,0	1PA100-420	1250	150	108	62	M12	3
36,1	39,9	36,1	39,9	1PA100-500	1250	144	116	62	M12	3
40,0	44,0	40,0	44,0	1PA100-530	1600	152	134	72	M12	3
44,1	50,0	44,1	50,0	1PA100-540	1600	152	134	72	M12	3
26,0	28,0	26,0	28,0	1PA100-409	1300	180	110	62	M12	4
28,1	30,0	28,1	30,0	1PA100-408	1300	180	110	62	M12	4
30,1	33,0	30,1	33,0	1PA100-410	1300	180	110	62	M12	4
33,1	36,2	33,1	36,2	1PA100-460	1250	180	110	62	M12	4
36,3	40,0	36,3	40,0	1PA100-430	1600	180	116	62	M12	4
36,0	39,0	36,0	39,0	1PA100-480	1600	220	116	62	M12	5

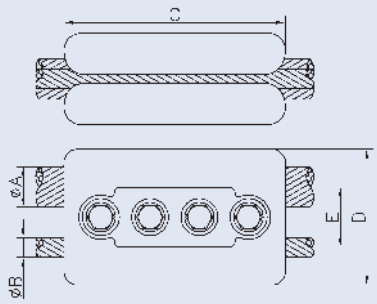

20,0	32,9	24,0	36,5	1PA500-100	1250	136	98	52	M12	3
33,0	39,0	33,0	39,0	1PA500-170	1100	150	108	62	M12	3
39,2	50,0	25,0	50,0	1PA500-200	1600	152	134	72	M14	3
26,0	30,0	26,0	36,0	1PA500-409	1300	180	110	62	M12	4
30,1	43,2	30,1	43,2	1PA500-160	1400	180	110	62	M12	4
22,0	45,0	22,0	45,0	1PA500-130	1600	220	116	62	M12	5

AL-T-Connector

Conductor-Conductor

Dimension of Conductor				Code	Technical Data of Connector					
ØA		ØB			Max. Current	Dim. of Connector			Bolt Dim.	
Min.	Max.	Min.	Max.			D	E	C	ØA	ØB
24,1	33,0	24,1	33,0	1AB012-002	1250	96	87	177	M10	M10
24,1	33,0	33,1	42,0	1AB012-009	1250	96	87	190	M10	M10
33,1	42,0	33,1	42,0	1AB012-055	1400	96	87	202	M10	M10
33,1	42,0	52,1	63,0	1AB012-024	1400	96	90	191	M10	M10
52,1	63,0	52,1	63,0	1AB012-080	2200	90	90	229	M10	M10

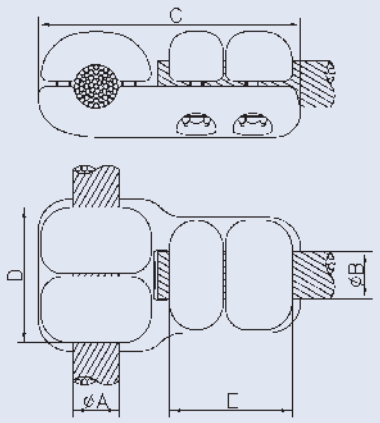

33,1	42,0	24,1	33,0	1AB012-035	1600	78	127	235	M10	M10
52,1	63,0	24,1	33,0	1AB012-078	1600	90	127	249	M10	M10

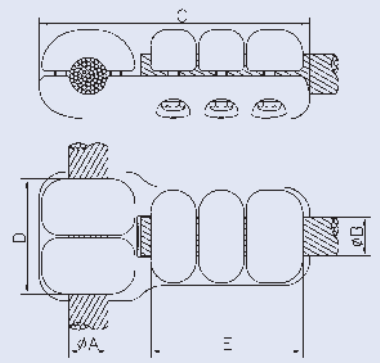

24,1	33,0	24,1	33,0	1AB012-006	1250	136	87	177	M10	M10
33,1	42,0	24,1	33,0	1AB012-036	1250	136	90	191	M10	M10
33,1	42,0	52,1	63,0	1AB012-011	2000	136	90	204	M10	M10

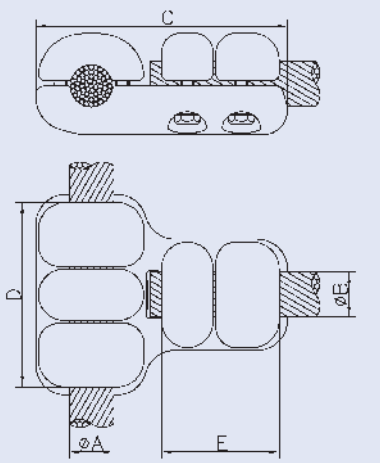

AL-T-Connector

Conductor-Conductor

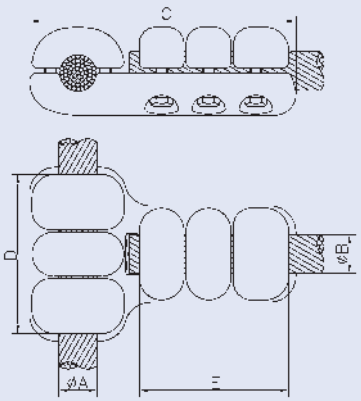

Dimension of Conductor				Code	Technical Data of Connector					
ØA		ØB			Max. Current	Dim. of Connector			Bolt Dim.	
Min.	Max.	Min.	Max.			D	E	C	ØA	ØB
24,1	31,4	24,1	33,0	1AB012-004	1600	136	127	217	M10	M10
24,1	31,4	33,1	42,0	1AB012-008	1600	136	127	220	M10	M10
24,1	31,4	52,1	63,0	1AB012-013	1600	136	136	237	M10	M10
31,5	33,0	24,1	33,0	1AB012-004	1600	136	127	217	M10	M10
31,5	33,0	33,1	42,0	1AB012-008	1600	136	127	220	M10	M10
31,5	33,0	42,1	44,0	1AB012-032	1600	136	127	220	M10	M10
31,5	33,0	52,1	63,0	1AB012-013	1600	136	136	237	M10	M10
33,1	42,0	24,1	33,0	1AB012-038	1600	136	127	231	M10	M10
33,1	42,0	33,1	42,0	1AB012-042	2000	136	127	231	M10	M10
33,1	42,0	42,1	52,0	1AB012-019	2150	136	136	252	M10	M10
42,1	44,0	31,5	42,0	1AB012-060	1600	136	127	238	M10	M10
42,1	44,0	42,1	44,0	1AB012-062	2500	136	127	240	M10	M10
42,1	44,0	44,1	52,0	1AB012-058	2500	136	136	260	M10	M10
44,1	52,0	33,1	42,0	1AB012-063	2000	236	186	303	M10	M10
44,1	52,0	42,1	52,0	1AB012-058	2500	136	136	260	M10	M10

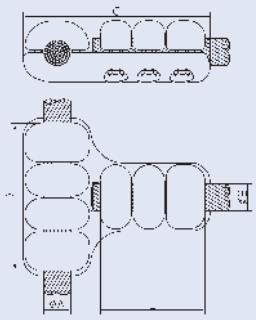

33,1	42,0	52,1	63,0	1AB012-023	2000	176	136	252	M10	M10
52,1	63,0	52,1	63,0	1AB012-071	3200	182	136	269	M10	M10

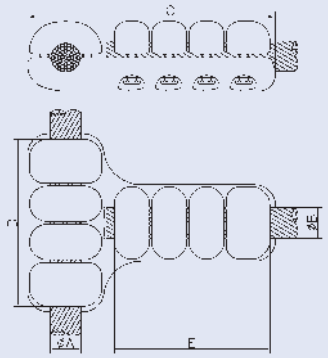

33,1	38,4	33,1	42,0	1AB012-034	2000	176	167	271	M10	M10
38,5	42,0	33,1	42,0	1AB012-034	2000	176	167	271	M10	M10
38,5	42,0	38,5	42,0	1AB012-054	2000	176	167	271	M10	M10
52,1	63,0	52,1	63,0	1AB012-073	3200	182	182	313	M10	M10

AL-T-Connector

Conductor-Conductor

Dim. of Conductor				Code	Technical Data of Connector					
ØA		ØB			Max. Current	Dimennsion of Connector			Bolt Dim. ØA	Inst. Die No.
Min.	Max.	Min.	Max.			D	E	C		
24,1	33,0	27,5	28,4	1AB050-011	900	136	105	208	M10	KZ 42
24,1	33,0	30,0	30,9	1AB050-059	1200	136	160	263	M10	KZ 52
24,1	33,0	31,7	32,8	1AB050-013	1200	136	160	263	M10	KZ 52
24,1	33,0	32,9	33,9	1AB050-012	1200	136	160	263	M10	KZ 52
33,1	42,0	32,9	33,9	1AB050-018	1200	136	160	279	M10	KZ 52
33,1	42,0	36,1	37,1	1AB050-019	1350	136	170	289	M10	KZ 58
42,1	52,0	32,9	33,9	1AB050-033	1200	156	160	288	M10	KZ 52
42,1	52,0	36,1	37,1	1AB050-098	1350	136	170	291	M10	KZ 58

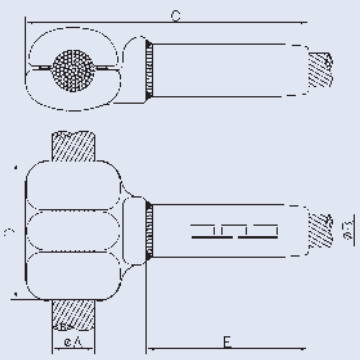

AL-T-Connector

Tube-Conductor

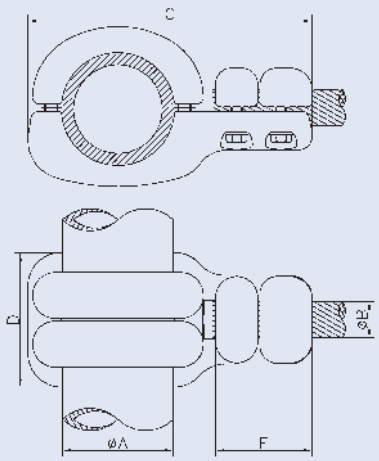

Dim. of Conductor			Code	Technical Data of Connector					
ØA	ØB			Max. Current	Dim. of Connector			Bolt Dim.	
	Min.	Max.			D	E	C	ØA	ØB
63,0	52,1	63,0	1AB012-080	2200	108	90	229	M10	M10
80,0	52,1	63,0	1AB012-098	2200	100	90	242	M12	M10
100,0	52,1	63,0	1AB012-119	2200	106	90	281	M12	M10
120,0	24,1	33,0	1AB012-126	1250	102	78	280	M12	M10
120,0	52,1	63,0	1AB012-138	2200	102	90	284	M12	M10
140,0	33,1	42,0	1AB012-152	1400	102	87	320	M12	M10
140,0	42,1	52,0	1AB012-160	1700	102	90	332	M12	M10
150,0	33,1	42,0	1AB012-152	1400	102	87	320	M12	M10
150,0	42,1	52,0	1AB012-160	1700	102	90	332	M12	M10
160,0	33,1	42,0	1AB012-152	1400	102	87	320	M12	M10
160,0	42,1	52,0	1AB012-160	1700	102	90	332	M12	M10
200,0	52,1	63,0	1AB012-193	2200	106	90	387	M12	M10
250,0	52,1	63,0	1AB012-250	2200	106	90	429	M12	M10
2“	52,1	63,0	1AB012-080	2200	108	90	229	M10	M10
2,5“	52,1	63,0	1AB012-098	2200	100	90	242	M12	M10
3,5“	52,1	63,0	1AB012-119	2200	106	90	281	M12	M10
4“	24,1	33,0	1AB012-126	1250	102	78	280	M12	M10
4“	52,1	63,0	1AB012-138	2200	102	90	284	M12	M10
4,5“	24,1	33,0	1AB012-126	1250	102	78	280	M12	M10
4,5“	52,1	63,0	1AB012-138	2200	102	90	284	M12	M10
5“	33,1	42,0	1AB012-152	1400	102	87	320	M12	M10
5“	42,1	52,0	1AB012-160	1700	102	90	332	M12	M10

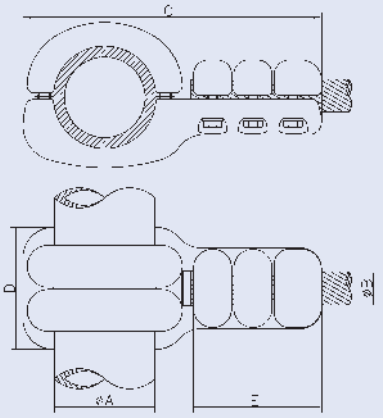

63,0	24,1	33,0	1AB012-078	1600	108	127	249	M10	M10
100,0	24,1	33,0	1AB012-106	1600	106	127	298	M12	M10
100,0	33,1	42,0	1AB012-112	2000	106	127	298	M12	M10
120,0	24,1	33,0	1AB012-130	1600	102	127	323	M12	M10
120,0	33,1	42,0	1AB012-132	2000	102	118	328	M12	M10
120,0	42,1	52,0	1AB012-140	2500	102	136	338	M12	M10
140,0	33,1	42,0	1AB012-154	2000	102	127	360	M12	M10
140,0	42,1	52,0	1AB012-162	2500	102	136	377	M12	M10
140,0	52,1	63,0	1AB012-170	3200	102	136	380	M12	M10
150,0	33,1	42,0	1AB012-154	2000	102	127	360	M12	M10
150,0	42,1	52,0	1AB012-162	2500	102	136	377	M12	M10
150,0	52,1	63,0	1AB012-170	3200	102	136	380	M12	M10
160,0	33,1	42,0	1AB012-154	2000	102	127	360	M12	M10
160,0	42,1	52,0	1AB012-162	2500	102	136	377	M12	M10

AL-T-Connector

Tube-Conductor

Dim. of Conductor			Code	Technical Data of Connector					
ØA	ØB			Max. Current	Dim. of Connector			Bolt Dim.	
	Min.	Max.			D	E	C	ØA	ØB
160,0	52,1	63,0	1AB012-170	3200	102	136	380	M12	M10
200,0	33,1	42,0	1AB012-184	2000	106	118	409	M12	M10
200,0	42,1	52,0	1AB012-185	2500	106	136	424	M12	M10
250,0	33,1	42,0	1AB012-186	2000	102	118	457	M12	M10
250,0	42,1	44,0	1AB012-187	1600	102	118	457	M12	M10
250,0	44,1	52,0	1AB012-198	2500	102	136	471	M12	M10
250,0	52,1	63,0	1AB012-252	3200	102	136	471	M12	M10
2“	24,1	33,0	1AB012-078	1600	108	127	249	M12	M10
3,5“	24,1	33,0	1AB012-106	1600	106	127	298	M12	M10
3,5“	33,1	42,0	1AB012-112	2000	106	127	298	M12	M10
4“	24,1	33,0	1AB012-130	1600	102	127	323	M12	M10
4“	33,1	42,0	1AB012-132	2000	102	118	328	M12	M10
4“	42,1	52,0	1AB012-140	2500	102	136	338	M12	M10
4,5“	24,1	33,0	1AB012-130	1600	102	127	323	M12	M10
4,5“	33,1	42,0	1AB012-132	2000	102	118	328	M12	M10
4,5“	42,1	52,0	1AB012-140	2500	102	136	338	M12	M10
5“	33,1	42,0	1AB012-154	2000	102	127	360	M12	M10
5“	42,1	44,0	1AB012-162	2500	102	136	377	M12	M10
5“	44,1	52,0	1AB012-170	3200	102	136	380	M12	M10

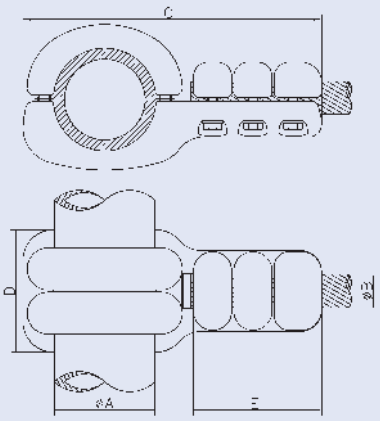

100	52,1	63	1AB012-105	2600	106	182	361	M12	M10
120	33,1	42	1AB012-134	2000	102	167	364	M12	M10
140	33,1	42	1AB012-156	2000	102	167	402	M12	M10
140	52,1	63	1AB012-168	3200	102	182	432	M12	M10
150	33,1	42	1AB012-156	2000	102	167	402	M12	M10
150	52,1	63	1AB012-168	3200	102	182	432	M12	M10
160	33,1	42	1AB012-156	2000	102	167	402	M12	M10
160	52,1	63	1AB012-168	3200	102	182	432	M12	M10
200	52,1	63	1AB012-192	3200	106	182	479	M12	M10
3,5“	52,1	63	1AB012-105	2600	106	182	361	M12	M10
4“	33,1	42	1AB012-134	2000	102	167	364	M12	M10
4,5“	33,1	42	1AB012-134	2000	102	167	364	M12	M10
5“	33,1	42	1AB012-156	2000	102	167	402	M12	M10
5“	52,1	63	1AB012-168	3200	102	182	432	M12	M10

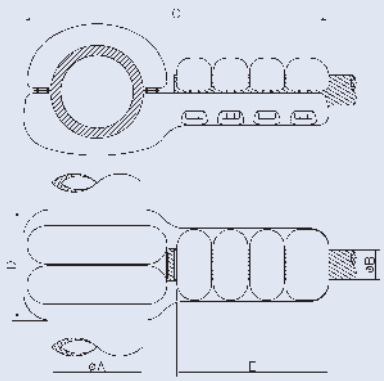

AL-T-Connector

Tube-Tube

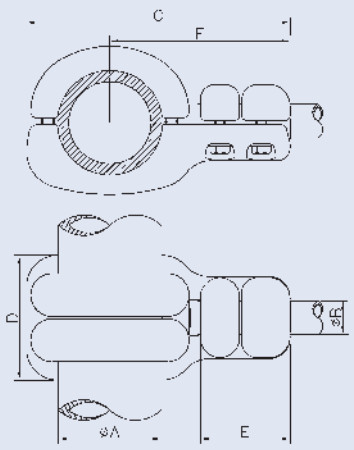

Dimension of Conductor		Code	Technical Data of Connector						
			Max. Current	Dim. of Connector				Bolt Dim.	
ØA	ØB			D	E	C	F	ØA	ØB
63,0	63,0	1AB012-080	2200	108	99	229	170	M10	M10
80,0	63,0	1AB012-098	2200	100	99	242	170	M12	M10
100,0	63,0	1AB012-119	2200	106	99	281	200	M12	M10
100,0	100,0	1AB012-121	2600	106	96	281	200	M12	M12
120,0	63,0	1AB012-138	2200	102	99	284	192	M12	M10
120,0	120,0	1AB012-146	3000	102	90	285	190	M12	M12
120,0	140,0	1AB012-149	3000	102	90	293	201	M12	M12
120,0	150,0	1AB012-149	3000	102	90	293	201	M12	M12
120,0	160,0	1AB012-149	3000	102	90	293	201	M12	M12
140,0	40,0	1AB012-160	1700	102	99	332	220	M12	M10
140,0	50,0	1AB012-160	1700	102	99	332	220	M12	M10
150,0	40,0	1AB012-160	1700	102	99	332	220	M12	M10
150,0	50,0	1AB012-160	1700	102	99	332	220	M12	M10
160,0	40,0	1AB012-160	1700	102	99	332	220	M12	M10
160,0	50,0	1AB012-160	1700	102	99	332	220	M12	M10
200,0	63,0	1AB012-193	2200	106	99	387	253	M12	M10
200,0	100,0	1AB012-183	2600	106	96	384	250	M12	M12
250,0	63,0	1AB012-250	2200	106	99	429	270	M12	M10
2“	2“	1AB012-080	2200	108	99	229	170	M10	M10
2,5“	2“	1AB012-098	2200	100	99	242	170	M12	M10
3,5“	2“	1AB012-119	2200	106	99	281	200	M12	M10
3,5“	3,5“	1AB012-121	2600	106	96	281	200	M12	M12
4“	2“	1AB012-138	2200	102	99	284	192	M12	M10
4“	4“	1AB012-146	3000	102	90	285	190	M12	M12
4“	4,5“	1AB012-146	3000	102	90	285	190	M12	M12
4“	5“	1AB012-149	3000	102	90	293	201	M12	M12
4,5“	2“	1AB012-138	2200	102	99	284	192	M12	M10
4,5“	4“	1AB012-146	3000	102	90	285	190	M12	M12
4,5“	4,5“	1AB012-146	3000	102	90	285	190	M12	M12
4,5“	5“	1AB012-149	3000	102	90	293	201	M12	M12
5“	1,5“	1AB012-160	1700	102	99	332	220	M12	M10

AL-T-Connector

Tube-Tube

Dimension of Conductor		Code	Technical Dates of Connector						
			Max. Current	Dim. of Connector				Bolt Dim.	
ØA	ØB			D	E	C	F	ØA	ØB
120,0	40,0	1AB012-140	2500	102	145	338	245	M12	M10
120,0	50,0	1AB012-140	2500	102	145	338	245	M12	M10
140,0	40,0	1AB012-162	2500	102	145	377	265	M12	M10
140,0	50,0	1AB012-162	2500	102	145	377	265	M12	M10
140,0	63,0	1AB012-170	3200	102	145	380	265	M12	M10
150,0	40,0	1AB012-162	2500	102	145	377	265	M12	M10
150,0	50,0	1AB012-162	2500	102	145	377	265	M12	M10
150,0	63,0	1AB012-170	3200	102	145	380	265	M12	M10
160,0	40,0	1AB012-162	2500	102	145	377	265	M12	M10
160,0	50,0	1AB012-162	2500	102	145	377	265	M12	M10
160,0	63,0	1AB012-170	3200	102	145	380	265	M12	M10
200,0	40,0	1AB012-185	2500	106	145	424	290	M12	M10
200,0	50,0	1AB012-185	2500	106	145	424	290	M12	M10
250,0	40,0	1AB012-198	2500	102	145	471	300	M12	M10
250,0	50,0	1AB012-198	2500	102	145	471	300	M12	M10
250,0	63,0	1AB012-252	3200	102	145	471	312	M12	M10
4“	1,5“	1AB012-140	2500	102	145	338	245	M12	M10
4,5“	1,5“	1AB012-140	2500	102	145	338	245	M12	M10
5“	1,5“	1AB012-162	2500	102	145	377	265	M12	M10
5“	2“	1AB012-170	3200	102	145	380	265	M12	M10

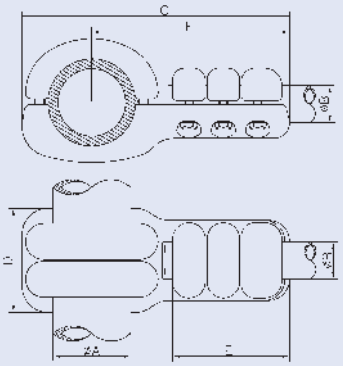

100,0	63,0	1AB012-105	2600	106	191	361	280	M12	M10
140,0	63,0	1AB012-168	3200	102	191	432	320	M12	M10
150,0	63,0	1AB012-168	3200	102	191	432	320	M12	M10
160,0	63,0	1AB012-168	3200	102	191	432	320	M12	M10
200,0	63,0	1AB012-192	3200	106	191	479	345	M12	M10
3,5“	2“	1AB012-105	2600	106	191	361	280	M12	M10
5“	2“	1AB012-168	3200	102	191	432	280	M12	M10

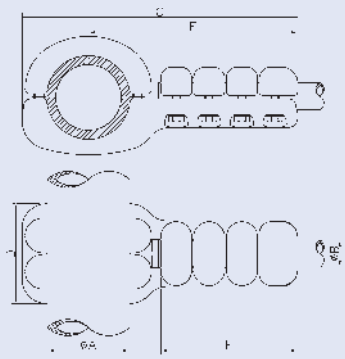

AL-T-Connector

Tube-Tube

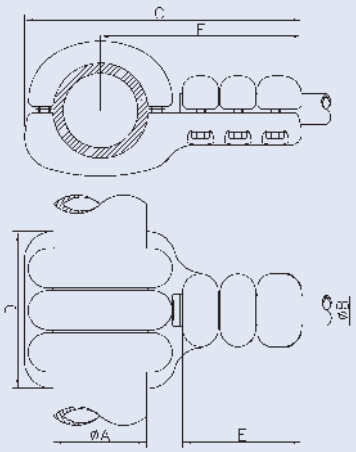

Dimension of Conductor		Code	Technical Data of Connector						
			Max. Current	Dim. of Connector				Bolt Dim.	
ØA	ØB			D	E	C	F	ØA	ØB
100,0	100,0	1AB012-123	3600	150	140	311	230	M12	M12
120,0	63,0	1AB012-142	3200	142	145	353	260	M12	M10
120,0	120,0	1AB012-148	4000	142	130	325	230	M12	M12
140,0	80,0	1AB012-175	3200	142	130	362	250	M12	M12
140,0	140,0	1AB012-182	5000	142	130	364	252	M12	M12
140,0	150,0	1AB012-182	5000	142	130	364	252	M12	M12
140,0	160,0	1AB012-182	5000	142	130	364	252	M12	M12
150,0	80,0	1AB012-175	3200	142	130	362	250	M12	M12
150,0	140,0	1AB012-182	5000	142	130	364	252	M12	M12
150,0	150,0	1AB012-182	5000	142	130	364	252	M12	M12
150,0	160,0	1AB012-182	5000	142	130	364	252	M12	M12
160,0	80,0	1AB012-175	3200	142	130	362	250	M12	M12
160,0	140,0	1AB012-182	5000	142	130	364	252	M12	M12
160,0	150,0	1AB012-182	5000	142	130	364	252	M12	M12
160,0	160,0	1AB012-182	5000	142	130	364	252	M12	M12
200,0	200,0	1AB012-200	6000	150	140	^435	301	M12	M12
3,5“	3,5“	1AB012-123	3600	150	140	311	230	M12	M12
4“	2“	1AB012-142	3200	142	145	353	260	M12	M10
4“	4“	1AB012-148	4000	142	130	325	230	M12	M12
4“	4,5“	1AB012-148	4000	142	130	325	230	M12	M12
4,5“	2“	1AB012-142	3200	142	145	353	260	M12	M10
4,5“	4“	1AB012-148	4000	142	130	325	230	M12	M12
4,5“	4,5“	1AB012-148	4000	142	130	325	230	M12	M12
5“	2,5“	1AB012-175	3200	142	130	362	250	M12	M12
5“	5“	1AB012-182	5000	142	130	364	252	M12	M12

AL-T-Terminal

Conductor-Stud

Dim. of Conductor			Code	Technical Data of Connector						
ØA		ØB		Max. Current	Dim. of Connector				Bolt Dim.	
Min.	Max.				D	E	C	F	ØA	ØB
24,1	33,0	30,0	1AB012-002	1250	96	87	177	137	M10	M10
24,1	33,0	40,0	1AB012-009	1250	96	90	190	150	M10	M10
33,1	42,0	30,0	1AB012-055	1400	96	90	202	155	M10	M10
33,1	42,0	40,0	1AB012-055	1400	96	90	202	155	M10	M10
33,1	42,0	50,0	1AB012-024	1400	96	99	191	144	M10	M10
33,1	42,0	60,0	1AB012-024	1400	96	99	191	144	M10	M10
52,1	63,0	50,0	1AB012-080	2200	90	99	229	170	M10	M10
52,1	63,0	60,0	1AB012-080	2200	90	99	229	170	M10	M10

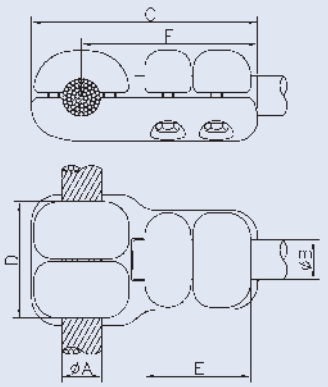

24,1	33,0	30,0	1AB012-006	1250	136	87	177	137	M10	M10
33,1	42,0	30,0	1AB012-036	1250	136	87	191	144	M10	M10
33,1	42,0	50,0	1AB012-011	2000	136	99	204	157	M10	M10
33,1	42,0	60,0	1AB012-011	2000	136	99	204	157	M10	M10

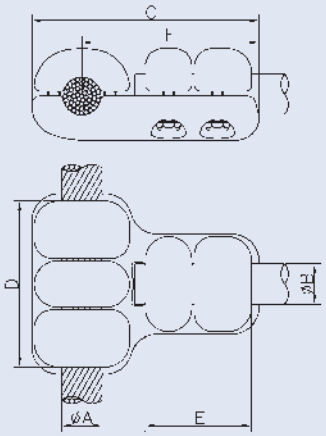

24,1	33,0	30,0	1AB012-004	1600	136	127	217	177	M10	M10
24,1	33,0	40,0	1AB012-008	1600	136	127	220	178	M10	M10
24,1	33,0	50,0	1AB012-013	1600	136	145	237	197	M10	M10
24,1	33,0	60,0	1AB012-013	1600	136	145	237	197	M10	M10
33,1	42,0	30,0	1AB012-038	1600	136	127	231	184	M10	M10
33,1	42,0	40,0	1AB012-042	2000	136	127	231	184	M10	M10
33,1	42,0	50,0	1AB012-019	2150	136	145	252	205	M10	M10
42,1	44,0	30,0	1AB012-060	1600	136	127	238	188	M10	M10
42,1	44,0	40,0	1AB012-060	1600	136	127	238	188	M10	M10
42,1	44,0	50,0	1AB012-058	2500	136	145	260	210	M10	M10
44,1	52,0	30,0	1AB012-063	2000	236	189	303	248	M10	M10
44,1	52,0	40,0	1AB012-063	2000	236	189	303	248	M10	M10
44,1	52,0	50,0	1AB012-058	2500	136	145	260	210	M10	M10

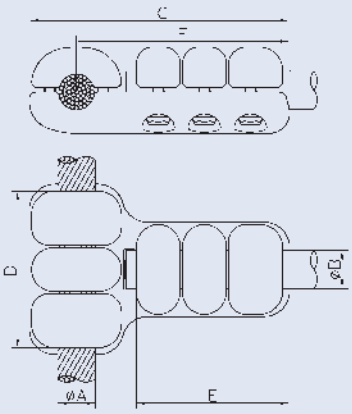

AL-T-Terminal

Conductor-Stud

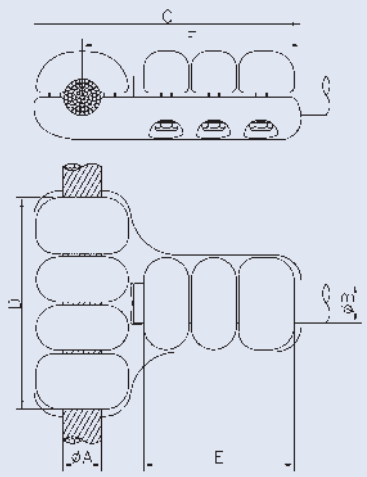

Dim. of Conductor			Code	Technical Data of Connector						
ØA		ØB		Max. Current	Dim. of Connector				Bolt Dim.	
Min.	Max.				D	E	C	F	ØA	ØB
33,1	42,0	50,0	1AB012-023	2000	176	145	252	205	M10	M10
33,1	42,0	60,0	1AB012-023	2000	176	145	252	205	M10	M10
52,1	63,0	50,0	1AB012-071	3200	182	145	269	210	M10	M10
52,1	63,0	60,0	1AB012-071	3200	182	145	269	210	M10	M10

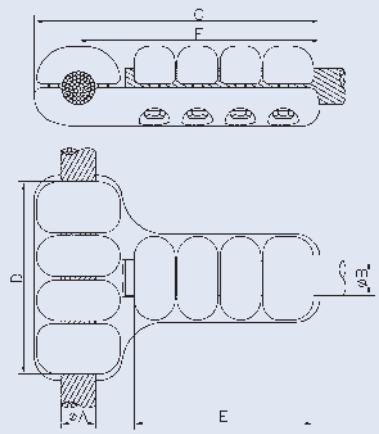

33,1	38,4	30,0	1AB012-034	2000	176	167	271	224	M10	M10
33,1	38,4	40,0	1AB012-034	2000	176	167	271	224	M10	M10
38,5	42,0	30,0	1AB012-034	2000	176	167	271	224	M10	M10
38,5	42,0	40,0	1AB012-054	2000	176	167	271	224	M10	M10
52,1	63,0	50,0	1AB012-073	3200	182	191	313	254	M10	M10
52,1	63,0	60,0	1AB012-073	3200	182	191	313	254	M10	M10

AL-T-Flat Terminal

Conductor-Flat Terminal

Dimension of Conductor				Code	Technical Data of Connector					
ØA		C	D		Max. Current	Dim. of Connector				Bolt Dim. ØA
Min.	Max.					E	F	G	H	
33,1	42,0	100	100	1CB012-030	1600	20	150	118	198	M10
42,1	44,0	100	100	1CB012-031	1600	20	150	118	198	M10
52,1	63,0	100	100	1CB010-210	3150	35	161	136	220	M10

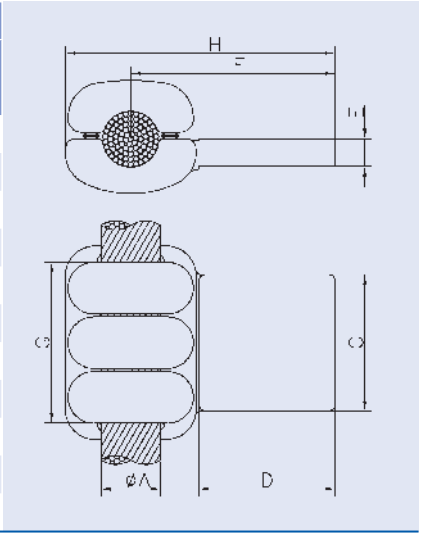

AL-T-Flat Terminal

Tube-Flat Terminal

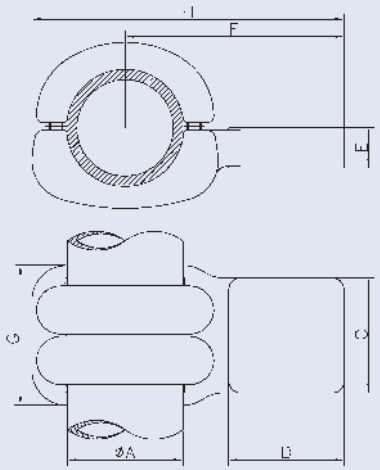

Dimension of Conductor			Code	Technical Data of Connector					
				Max. Current	Dim. of Connector				Bolt Dim.
ØA	C	D			E	F	G	H	ØA
100,0	75	75	1CB012-100	2000	30	165	106	246	M12
100,0	100	100	1CB012-101	2600	35	190	106	271	M12
140,0	100	100	1CB012-161	2500	35	217	102	332	M12
140,0	125	125	1CB012-160	4000	35	242	102	357	M12
140,0	200	100	1CB012-162	4000	35	217	102	332	M12
150,0	100	100	1CB012-161	2500	35	217	102	332	M12
150,0	125	125	1CB012-160	4000	35	242	102	357	M12
150,0	200	100	1CB012-162	4000	35	217	102	332	M12
160,0	100	100	1CB012-161	2500	35	217	102	332	M12
160,0	125	125	1CB012-160	4000	35	242	102	357	M12
160,0	200	100	1CB012-162	4000	35	217	102	332	M12
200,0	100	100	1CB012-200	2500	30	244	106	378	M12
250,0	125	125	1CB012-252	4000	35	295	102	454	M12

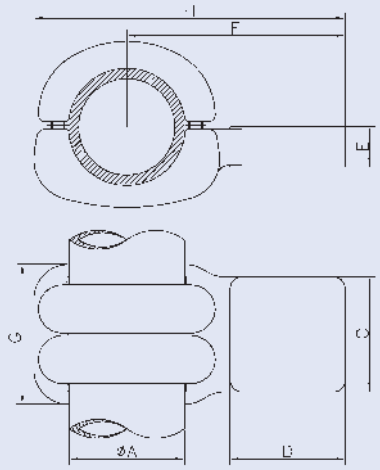

3,5″	75	75	1CB012-100	2000	30	165	106	246	M12
3,5″	100	100	1CB012-101	2600	35	190	106	271	M12
5″	100	100	1CB012-161	2500	35	217	102	332	M12
5″	125	125	1CB012-160	4000	35	242	102	357	M12
5″	200	100	1CB012-162	4000	35	217	102	332	M12

AL-Welded-Flat Terminal

Dimension of Conductor				Code	Technical Data of Connector			
					Max. Current	Dim. of Connector		
A	B	C	D			Figur	D	E
220	130	25	100	1CB082-015	3620	1	100	100
145	130	35	120	1CB082-013	3620	1	100	100
199	130	20	104	1CB082-012	2200	1	100	100
300	130	30	210	1CB082-021	7200	1	200	100
380	127	45	300	1CB082-022	9000	1	300	100
400	130	20	210	1CB082-020	4920	1	200	100

Figur 1

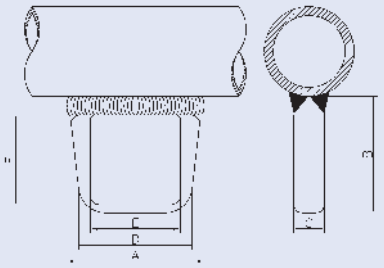

AL-T-Suspension-Connector

Conductor-Conductor

Figur 1

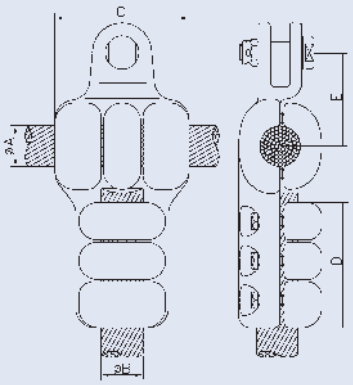

Figur 2

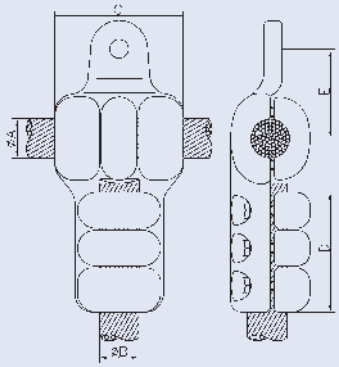

Dim. of Conductor				Code	Technical Data of Connector								
ØA		ØB			Max. Curr.	Dim. Connector			Bolt Dim.		Suspension		
Min.	Max.	Min.	Max.			D	E	C	ØA	ØB	Bolt Dim.	Fig.	F
33,1	42,0	33,1	42,0	1SB100-062	2000	136	127	95	3/M10	3/M10	Ø 19	1	
33,1	42,0	33,1	42,0	1SB100-069	2000	136	127	95	3/M10	3/M10	Ø 22	1	
33,1	42,0	33,1	42,0	1SB100-064	2000	136	127	100	3/M10	3/M10	Ø 19	2	19
33,1	42,0	33,1	42,0	1SB100-066	2000	176	167	100	4/M10	4/M10	Ø 19	2	19
42,1	44,0	42,1	44,0	1SB100-053	1600	136	127	100	3/M10	3/M10	Ø 19		
42,1	44,0	42,1	44,0	1SB100-054	1600	136	127	100	3/M10	3/M10	Ø 22		

AL-90°-Connector

Tube-Conductor

Dim. of Conductor			Code	Technical Data of Connector						
ØA	ØB			Max. Current	Dim. of Connector				Bolt Dim.	
	Min.	Max.			C	D	E	F	ØA	ØB
63,0	33,1	42,0	1BD010-120	1400	99	78	140	135	M10	M10
63,0	52,1	63,0	1BD010-157	2200	99	90	137	137	M10	M10
2“	33,1	42,0	1BD010-120	1400	99	78	140	135	M10	M10
2“	52,1	63,0	1BD010-157	2200	99	90	137	137	M10	M10

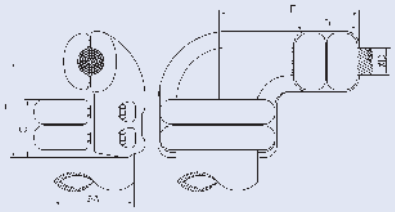

63,0	52,1	63,0	1BD010-160	2200	99	136	157	204	M10	M10
80,0	52,1	63,0	1BD010-063	2400	101	136	171	160	M12	M10
120,0	33,1	42,0	1BD010-233	2000	90	136	149	260	M12	M10
200,0	33,1	42,0	1BD010-260	2000	96	136	165	263	M12	M10
2“	52,1	63,0	1BD010-160	2200	99	136	157	204	M10	M10
2,5“	52,1	63,0	1BD010-063	2400	101	136	171	160	M12	M10
4“	33,1	42,0	1BD010-233	2000	90	136	149	260	M12	M10
4,5“	33,1	42,0	1BD010-063	2000	90	136	149	260	M12	M10

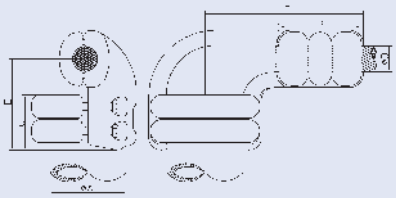

AL-90°-Terminal

Conductor-Stud

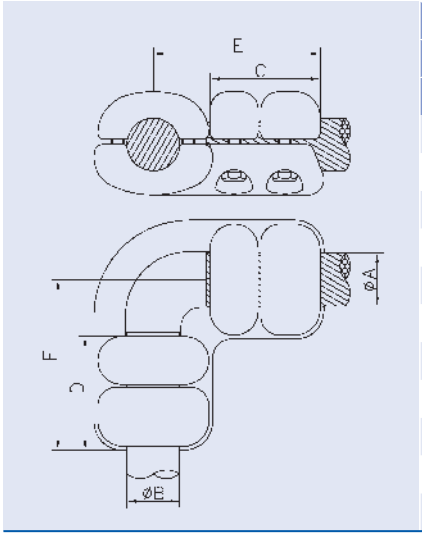

Dim. of Conductor			Code	Technical Data of Connector						
ØA		ØB		Max. Current	Dim. of Connector				Bolt Dim.	
Min.	Max.				C	D	E	F	ØA	ØB
33,1	42,0	50,0	1BD010-120	1400	78	99	135	140	M10	M10
33,1	42,0	60,0	1BD010-120	1400	78	99	135	140	M10	M10
52,1	63,0	30,0	1BD010-120	1400	90	90	140	135	M10	M10
52,1	63,0	40,0	1BD010-120	1400	90	90	140	135	M10	M10
52,1	63,0	50,0	1BD010-157	2200	90	99	137	137	M10	M10
52,1	63,0	60,0	1BD010-157	2200	90	99	137	137	M10	M10

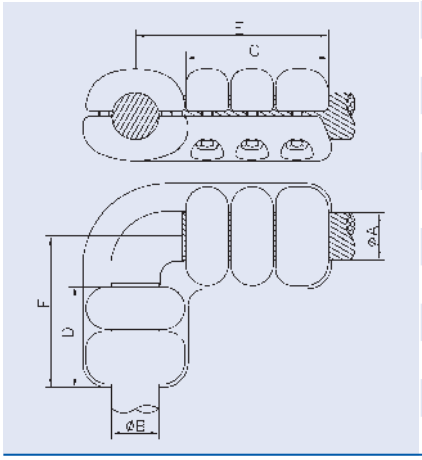

33,1	42,0	30,0	1BD010-112	1250	136	90	170	120	M10	M10
33,1	42,0	40,0	1BD010-137	1400	127	82	186	138	M10	M10
52,1	63,0	50,0	1BD010-160	2200	136	99	204	157	M10	M10
52,1	63,0	60,0	1BD010-160	2200	136	99	204	157	M10	M10

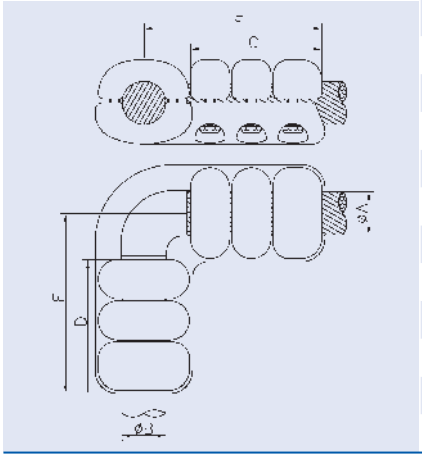

33,1	42,0	30,0	1BD010-133	2000	127	130	175	175	M10	M10
33,1	42,0	40,0	1BD010-133	2000	127	130	175	175	M10	M10
33,1	42,0	50,0	1BD010-138	2000	127	145	175	190	M10	M10
42,1	52,0	30,0	1BD010-138	2000	136	130	190	175	M10	M10
42,1	52,0	40,0	1BD010-138	2000	136	130	190	175	M10	M10

AL-90°-Terminal

Stud-Conductor

Dimension of Conductor			Code	Technical Data of Connector						
ØA	ØB			Max. Current	Dimension of Connector				Bolt Dim.	Inst. Die No.
	Min.	Max.			C	D	E	F	ØA	
30,0	45,6	47,0	1BD050-050	1600	100	210	103	280	M10	KZ 70
40,0	31,7	32,8	1BD050-034	1200	100	160	122	218	M10	KZ 52
40,0	36,1	37,1	1BD050-033	1340	100	170	122	228	M10	KZ 58
40,0	45,6	47,0	1BD050-050	1600	100	210	103	280	M10	KZ 70
50,0	31,7	32,8	1BD050-034	1200	100	160	122	218	M10	KZ 52
50,0	36,1	37,1	1BD050-033	1340	100	170	122	228	M10	KZ 58

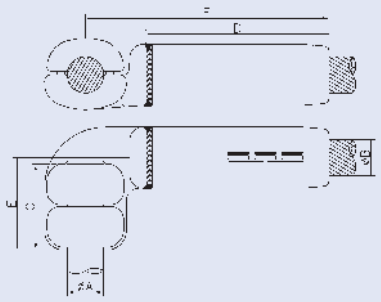

AL-90°-Terminal

Tube-Stud

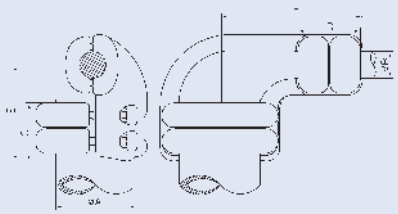

Dimension of Conductor		Code	Technical Data of Connector						
			Max. Current	Dim. of Connector				Bolt Dim.	
ØA	ØB			C	D	E	F	ØA	ØB
63,0	30,0	1BD010-120	1400	99	90	140	135	M10	M10
63,0	40,0	1BD010-120	1400	99	90	140	135	M10	M10
63,0	50,0	1BD010-157	2200	99	99	137	137	M10	M10
63,0	60,0	1BD010-157	2200	99	99	137	137	M10	M10
2″	30,0	1BD010-120	1400	99	90	140	135	M10	M10
2″	40,0	1BD010-120	1400	99	90	140	135	M10	M10
2″	50,0	1BD010-157	2200	99	99	137	137	M10	M10
2″	60,0	1BD010-157	2200	99	99	137	137	M10	M10

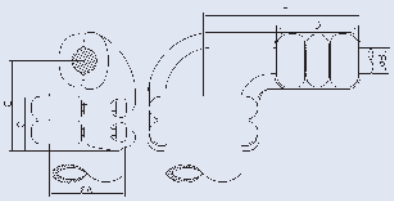

63,0	50,0	1BD010-160	2200	99	145	157	204	M10	M10
63,0	60,0	1BD010-160	2200	99	145	157	204	M10	M10
80,0	50,0	1BD010-063	2400	101	145	171	160	M12	M10
80,0	60,0	1BD010-063	2400	101	145	171	160	M12	M10
120,0	30,0	1BD010-233	2000	90	139	149	260	M12	M10
120,0	40,0	1BD010-233	2000	90	139	149	260	M12	M10
200,0	30,0	1BD010-260	2000	96	139	165	263	M12	M10
200,0	40,0	1BD010-260	2000	96	139	165	263	M12	M10
2″	50,0	1BD010-160	2200	99	145	157	204	M10	M10
2″	60,0	1BD010-160	2200	99	145	157	204	M10	M10
2,5″	50,0	1BD010-063	2400	101	145	171	160	M12	M10
2,5″	60,0	1BD010-063	2400	101	145	171	160	M12	M10
4″	30,0	1BD010-233	2000	90	139	149	260	M12	M10
4″	40,0	1BD010-233	2000	90	139	149	260	M12	M10
4,5″	30,0	1BD010-233	2000	90	139	149	260	M12	M10
4,5″	40,0	1BD010-233	2000	90	139	149	260	M12	M10

AL-90°-Flat Terminal

Conductor-Flat Terminal

Dimension of Conductor				Code	Technical Data of Connector					
ØA		C	D		Max. Current	Dim. of Connector				Bolt Dim ØA
Min.	Max.					E	F	G	H	
24,1	31,7	100	100	1CD010-125	1600	20	130	136	150	M10
31,8	35,7	75	75	1CD010-138	1600	15	130	118	142	M10
31,8	35,7	100	100	1CD010-110	1600	15	155	118	142	M10
31,8	35,7	120	120	1CD010-144	2000	15	175	118	151	M10
31,8	35,7	200	100	1CD010-129	2000	20	150	136	157	M10
35,8	37,2	75	75	1CD010-138	1600	15	130	118	142	M10
35,8	37,2	100	100	1CD010-108F	1600	16	162	127	155	M10
35,8	37,2	120	120	1CD010-144	2000	15	175	118	151	M10
35,8	37,2	200	100	1CD010-129	2000	20	150	136	157	M10
37,3	39,1	75	75	1CD010-138	1600	15	130	118	142	M10
37,3	39,1	100	100	1CD010-146F	1600	16	162	136	156	M10
37,3	39,1	120	120	1CD010-144	2000	15	175	118	151	M10
37,3	39,1	200	100	1CD010-129	2000	20	150	136	157	M10
39,1	42,0	75	75	1CD010-138	1600	15	130	118	142	M10
39,1	42,0	100	100	1CD010-146	1600	16	162	136	156	M10
39,1	42,0	120	120	1CD010-144	2000	15	175	118	151	M10
39,1	42,0	200	100	1CD010-129	2000	20	150	136	157	M10
42,1	44,0	100	100	1CD010-149	1600	16	162	118	156	M10
52,1	63,0	80	80	1CD010-065	2000	20	160	160	193	M10

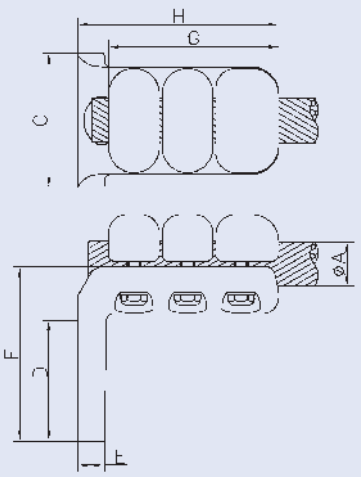

AL-90°-Flat Terminal

Tube-Flat Terminal

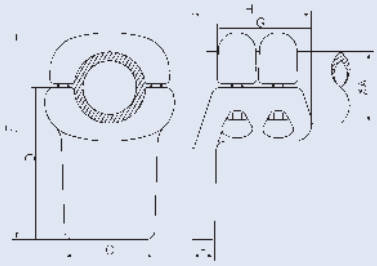

Dimension of Conductor			Code	Technical Data of Connector					
				Max. Current	Dim. of Connector				Bolt Dim.
ØA	C	D			E	F	G	H	ØA
80,0	85	85	1CD010-204	2000	25	163	90	124	M12
80,0	100	100	1CD010-206	2000	25	170	90	125	M12
100,0	125	125	1CD010-230	2600	25	210	96	135	M12
120,0	200	100	1CD010-269	3000	30	190	90	122	M12
140,0	80	80	1CD010-280	2000	25	194	90	118	M12
140,0	200	100	1CD010-282	4000	25	214	90	118	M12
150,0	80	80	1CD010-280	2000	25	194	90	118	M12
150,0	200	100	1CD010-282	4000	25	214	90	118	M12
160,0	80	80	1CD010-280	2000	25	194	90	118	M12
160,0	200	100	1CD010-282	4000	25	214	90	118	M12
2,5“	85	85	1CD010-204	2000	25	163	90	124	M12
2,5“	100	100	1CD010-206	2000	25	170	90	125	M12
3,5“	125	125	1CD010-230	2600	25	210	96	135	M12
4“	200	100	1CD010-269	3000	30	190	90	122	M12
4,5“	200	100	1CD010-269	3000	30	190	90	122	M12
5“	80	80	1CD010-280	2000	25	194	90	118	M12
5“	200	100	1CD010-282	4000	25	214	90	118	M12

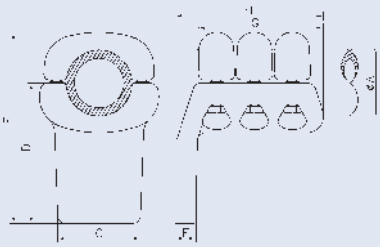

63,0	80	80	1CD010-065	2000	20	160	160	193	M10
100,0	125	125	1CD010-227	3150	30	212	140	179	M12
100,0	200	100	1CD010-229	3600	25	188	140	179	M12
120,0	100	100	1CD010-261	3150	35	181	130	175	M12
120,0	200	100	1CD010-270	4000	30	190	130	162	M12
140,0	125	125	1CD010-284	4000	35	240	130	151	M12
150,0	125	125	1CD010-284	4000	35	240	130	151	M12
160,0	125	125	1CD010-284	4000	35	240	130	151	M12
2“	80	80	1CD010-065	2000	20	160	160	193	M10
3,5“	125	125	1CD010-227	3150	30	212	140	179	M12
3,5“	200	100	1CD010-229	3600	25	188	140	179	M12
4“	100	100	1CD010-261	3150	35	181	130	175	M12
4“	200	100	1CD010-270	4000	30	190	130	162	M12
4,5“	100	100	1CD010-261	3150	35	181	130	175	M12
4,5“	200	100	1CD010-270	4000	30	190	130	162	M12
5“	125	125	1CD010-284	4000	35	240	130	151	M12

AL-Angle-Connector

Conductor-Conductor

Dimension of Conductor				Code	Technical Data of Connector					
ØA		ØB			Max. Current	Dim. of Connector			Bolt Dim.	
Min.	Max.	Min.	Max.			C	D	α	ØA	ØB
24,1	33,0	33,1	42,0	1AC010-037	1600	136	136	45°	M10	M10
24,1	33,0	42,1	44,0	1AC010-042	1600	136	136	45°	M10	M10
33,1	42,0	33,1	42,0	1AC010-039	2000	136	136	45°	M10	M10
42,1	44,0	31,1	33,0	1AC010-045	1600	136	106	45°	M10	M10
42,1	44,0	42,1	44,0	1AC010-046	1600	118	118	45°	M10	M10

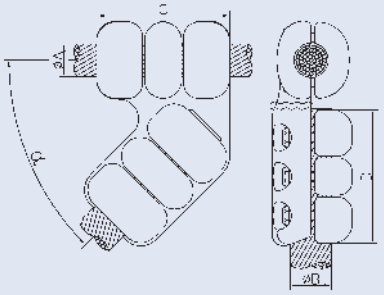

AL-Angle-Connector

Tube-Tube

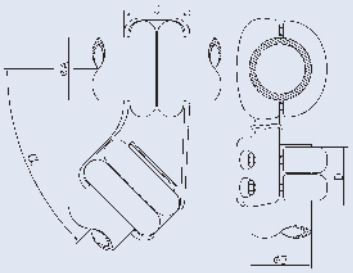

Dimension of Conductor		Code	Technical Data of Connector					
ØA	ØB		Max. Current	Dim. of Connector			Bolt Dim.	
				C	D	α	ØA	ØB
80,0	80,0	1AC010-060	2200	102	90	45°	M12	M12
100,0	80,0	1AC010-082	2200	106	90	45°	M12	M12
100,0	100,0	1AC010-100	2600	106	96	45°	M12	M12
120,0	120,0	1AE010-139	3000	102	90	75°	M12	M12
140,0	80,0	1AE010-151	2400	102	90	75°	M12	M12
140,0	140,0	1AE010-172	4000	102	90	75°	M12	M12
140,0	150,0	1AE010-172	4000	102	90	75°	M12	M12
140,0	160,0	1AE010-172	4000	102	90	75°	M12	M12
150,0	80,0	1AE010-151	2400	102	90	75°	M12	M12
150,0	140,0	1AE010-172	4000	102	90	75°	M12	M12
150,0	150,0	1AE010-172	4000	102	90	75°	M12	M12
150,0	160,0	1AE010-172	4000	102	90	75°	M12	M12
160,0	80,0	1AE010-151	2400	102	90	75°	M12	M12
160,0	140,0	1AE010-172	4000	102	90	75°	M12	M12
160,0	150,0	1AE010-172	4000	102	90	75°	M12	M12
160,0	160,0	1AE010-172	4000	102	90	75°	M12	M12
200,0	100,0	1AE010-200	2600	106	96	75°	M12	M12
2,5“	2,5“	1AC010-060	2200	102	90	45°	M12	M12
3,5“	2,5“	1AC010-082	2200	106	90	45°	M12	M12
3,5“	3,5“	1AC010-100	2600	106	96	45°	M12	M12
4“	4“	1AE010-139	3000	102	90	75°	M12	M12
4“	4,5“	1AE010-139	3000	102	90	75°	M12	M12
4,5“	4“	1AE010-139	3000	102	90	75°	M12	M12
4,5“	4,5“	1AE010-139	3000	102	90	75°	M12	M12
5“	2,5“	1AE010-151	2400	102	90	75°	M12	M12
5“	3“	1AE010-180	2500	102	90	75°	M12	M12
5“	5“	1AE010-172	4000	102	90	75°	M12	M12

AL-Angle-Connector

Tube-Tube

Dimension of Conductor		Code	Technical Data of Connector					
ØA	ØB		Max. Current	Dim. of Connector			Bolt Dim.	
				C	D	α	ØA	ØB
120,0	120,0	1AC010-120	4000	142	130	45°	M12	M12
140,0	140,0	1AE010-175	5000	142	130	65°	M12	M12
140,0	150,0	1AE010-175	5000	142	130	65°	M12	M12
140,0	160,0	1AE010-175	5000	142	130	65°	M12	M12
150,0	140,0	1AE010-175	5000	142	130	65°	M12	M12
150,0	150,0	1AE010-175	5000	142	130	65°	M12	M12
150,0	160,0	1AE010-175	5000	142	130	65°	M12	M12
160,0	140,0	1AE010-175	5000	142	130	65°	M12	M12
160,0	150,0	1AE010-175	5000	142	130	65°	M12	M12
160,0	160,0	1AE010-175	5000	142	130	65°	M12	M12
200,0	140,0	1AE010-195	5000	150	130	65°	M12	M12
200,0	150,0	1AE010-195	5000	150	130	65°	M12	M12
200,0	160,0	1AE010-195	5000	150	130	65°	M12	M12
4“	4“	1AC010-120	4000	142	130	45°	M12	M12
4“	4,5“	1AC010-120	4000	142	130	45°	M12	M12
4,5“	4“	1AC010-120	4000	142	130	45°	M12	M12
4,5“	4,5“	1AC010-120	4000	142	130	45°	M12	M12
5“	5“	1AE010-175	5000	142	130	65°	M12	M12

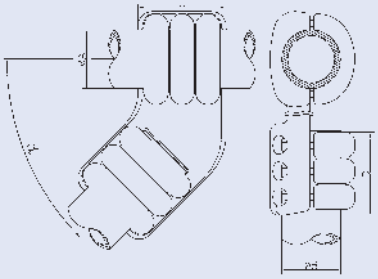

AL-Angle-Connector

Tube-Tube

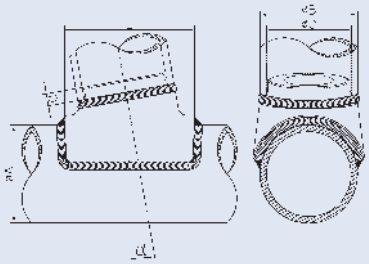

Dimension of Conductor				Code	Technical Data of Connector			
ØA	ØB	ØC			Max. Current	Dim. of Connector		
		Min.	Max.			C	D	α
120,0	63,0	47,0	47,0	1AE195-120	1600	15	100	15°
120,0	120,0	100,0	104,0	1AE195-121	3500	15	160	10°
160,0	120,0	100,0	104,0	1AE195-160	3500	15	160	10°
160,0	160,0	140,0	148,0	1AE195-167	3500	15	200	10°
250,0	160,0	140,0	148,0	1AE195-081	3150	15	250	10°
3“	3“	73,5	73,5	1AE195-089	2000	15	120	10°
3“	3“	73,5	77,7	1AE195-088	2000	15	120	15°
4,5“	2“	49,0	49,0	1AE195-120	1600	15	100	15°
5“	3“	73,5	73,5	1AE195-141	2000	15	120	10°
5“	3“	73,5	77,7	1AE195-142	2000	15	120	15°
5“	5“	122,3	122,3	1AE195-143	3000	15	200	15°
5“	5“	122,3	122,3	1AE195-144	3000	15	200	45°
6“	6“	146,0	146,0	1AE195-168	3500	15	200	10°

AL-Angle-Connector

Tube-Tube

Dimension of Conductor		Code	Technical Data of Connector					
ØA	ØB		Max. Current	Dim. of Connector			Bolt Dim.	
				C	D	α	ØA	ØB
120,0	80,0	1AF500-151	2400	102	90	20°	M12	M12
120,0	140,0	1AF500-161	3000	102	90	30°	M12	M12
120,0	150,0	1AF500-161	3000	102	90	30°	M12	M12
120,0	160,0	1AF500-161	3000	102	90	30°	M12	M12
140,0	80,0	1AF500-157	2400	102	90	30°	M12	M12
150,0	80,0	1AF500-157	2400	102	90	30°	M12	M12
160,0	80,0	1AF500-157	2400	102	90	30°	M12	M12
200,0	80,0	1AF500-183	2400	102	90	30°	M12	M12
200,0	100,0	1AF500-190	2600	102	96	30°	M12	M12
200,0	120,0	1AF500-200	3000	102	94	30°	M12	M12
250,0	100,0	1AF500-252	2600	102	96	30°	M12	M12
4“	2,5“	1AF500-151	2400	102	90	20°	M12	M12
4“	5“	1AF500-161	3000	102	90	30°	M12	M12
4,5“	2,5“	1AF500-151	2400	102	90	20°	M12	M12
4,5“	5“	1AF500-161	3000	102	90	30°	M12	M12
5“	2,5“	1AF500-157	2400	102	90	30°	M12	M12
6“	4“	1AF500-171	3000	102	90	30°	M12	M12
6“	4,5“	1AF500-171	3000	102	90	30°	M12	M12

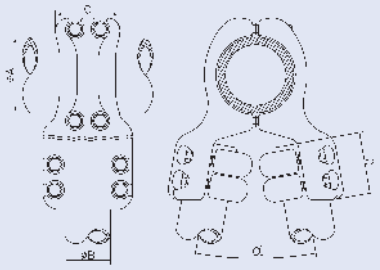

AL-Angle-Connector

Tube-Tube

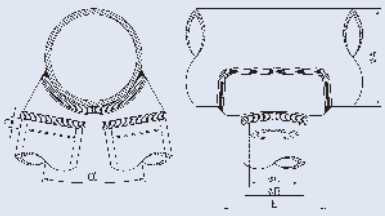

Dimension of Conductor				Code	Technical Data of Connector			
ØA	ØB	ØC			Max. Current	Dim. of Connector		
		Min.	Max.			D	F	α
120,0	63,0	47,0	47,0	1AF595-120	3200	15	100	30°
160,0	120,0	100,0	104,0	1AF595-161	3200	15	168	20°
250,0	120,0	100,0	104,0	1AF595-250	3200	15	170	20°
250,0	160,0	140,0	148,0	1AF595-249	3200	15	334	20°
3″	1,5″	37,9	40,6	1AF595-065	1600	15	100	30°
4,5″	2″	49,0	49,0	1AF595-120	3200	15	100	30°
5″	5″	122,3	122,3	1AF595-143	3000	15	186	30°
6″	3″	73,5	73,5	1AF595-168	3200	15	120	20°

AL-Angle-Flat Terminal

Conductor-Flat Terminal

Dim. of Conductor				Code	Technical Data of Connector					
ØA		C	D		Max. Current	Dim. of Connector				Bolt Dim.
Min.	Max.					E	F	G	α	ØA
31,8	33,3	100	100	1CE010-028	1600	15	118	250	15°	M10
31,8	33,3	125	125	1CC010-266	2000	15	118	235	45°	M10
33,4	35,7	100	100	1CE010-028	1600	15	118	250	15°	M10
33,4	35,7	125	125	1CC010-266	2000	15	118	235	45°	M10
35,8	37,2	60	60	1CC010-238	1250	17	118	196	45°	M10
35,8	37,2	80	80	1CC010-250	1600	17	118	206	45°	M10
35,8	37,2	100	100	1CE010-028	1600	15	118	250	15°	M10
35,8	37,2	100	100	1CC010-192	1600	17	118	223	45°	M10
35,8	37,2	125	125	1CC010-266	2000	15	118	235	45°	M10
37,3	39,1	60	60	1CC010-238	1250	17	118	196	45°	M10
37,3	39,1	80	80	1CC010-250	1600	17	118	206	45°	M10
37,3	39,1	100	100	1CE010-028	1600	15	118	250	15°	M10
37,3	39,1	100	100	1CC010-274F	1600	16	118	223	45°	M10
37,3	39,1	125	125	1CC010-266	2000	15	118	235	45°	M10
39,2	42,0	60	60	1CC010-238	1250	17	118	196	45°	M10
39,2	42,0	80	80	1CC010-250	1600	17	118	206	45°	M10
39,2	42,0	100	100	1CE010-028	1600	15	118	250	15°	M10
39,2	42,0	100	100	1CC010-274	1600	16	118	223	45°	M10
39,2	42,0	125	125	1CC010-266	2000	15	118	235	45°	M10
42,1	44,0	80	80	1CC010-277	1600	17	118	206	45°	M10
42,0	44,0	100	100	1CC010-275	1600	16	118	223	45°	M10
52,1	63,0	100	100	1CC010-306	2000	30	136	242	45°	M10

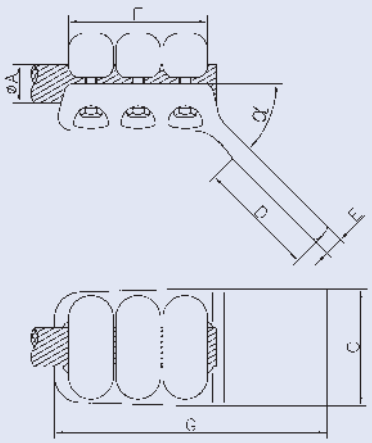

AL-Angle-Welded-Connector

Tube-Tube

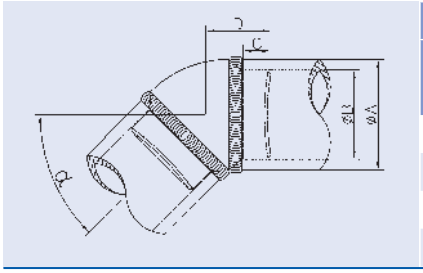

Dimension of Conductor			Code	Technical Data of Connector			
ØA	ØB			Max. Current	Dim. of Connector		
	Min.	Max.			C	D	α
80,0	64,0	72,0	1BC201-080	2000	20	42	45°
160,0	140,0	148,0	1BC201-160	4050	20	60	45°
4,5“	108,9	114,4	1AE201-127	2500	30	199	45°
5“	122,3	128,6	1AE202-096	3100	35	79	45°

AL-Support

Conductor

Dim. of Conductor		Code		Technical Data of Support							
				Bolt	Baseplate						
ØA			B	Dim.	Dimension			Drillingplan			
Min.	Max.			ØA	ØC	ØD	E	Pcs.	ØF	±α	β
20,0	33,0	1DC008-071	71	M10	127	160	6	8	18		
33,1	44,0	1DC008-040	70	M10	120	145	6	8	14	5°	
33,1	44,0	1DC008-025	76	M10	66	90	6	4	12		45°
33,1	44,0	1DC008-031	75	M10	100	76	6	8	14		
33,1	44,0	1DC008-030	76	M10	127	160	6	4	18		45°
33,1	44,0	1DC008-033	76	M10	127	160	6	8	18		
33,1	44,0	1DC008-035	90	M10	127	160	6	8	18	5°	
33,1	44,0	1DC008-050	90	M10	225	260	6	8	18		
33,1	44,0	1DC008-063	100	M12	127	160	8	8	18	5°	

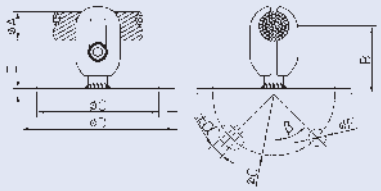

AL-Earthing-Stirrup

Conductor

Dimension of Conductor		Code	Technical Data			
ØA			Dim. of Connector			Bolt Dim.
Min.	Max.		D	E	C	ØA
24,1	33,0	1DG010-010	170	176	25	M10
33,1	42,0	1DG010-044	214	168	32	M10
42,1	44,0	1DG010-045	214	168	32	M10

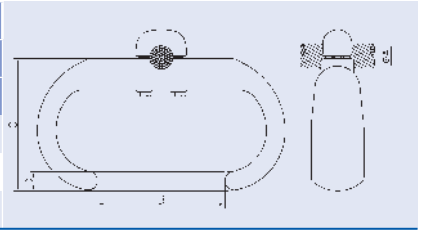

AL-Earthing-Stirrup

Tube

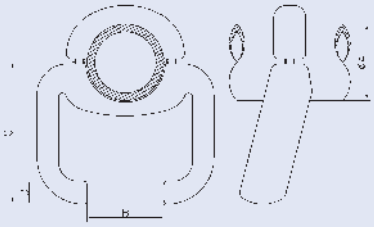

Dim. of Conductor	Code	Technical Data of Connector			
		Dim. of Connector			Bolt Dim.
ØA		D	E	C	ØA
80,0	1DG010-081	100	171	25	M12
80,0	1DG010-080	100	173	30	M12
80,0	1DG010-083	130	173	30	M12
100,0	1DG010-100	100	185	30	M12
100,0	1DG010-105	120	226	25	M12
100,0	1DG010-103	120	231	35	M12
120,0	1DG010-120	170	228	35	M12
140,0	1DG010-155	170	250	25	M12
140,0	1DG010-153	170	270	30	M12
140,0	1DG010-152	170	255	35	M12
150,0	1DG010-155	170	250	25	M12
150,0	1DG010-153	170	270	30	M12
150,0	1DG010-152	170	255	35	M12
160,0	1DG010-155	170	250	25	M12
160,0	1DG010-153	170	270	30	M12
160,0	1DG010-152	170	255	35	M12
200,0	1DG010-202	130	258	35	M12
200,0	1DG010-201	200	252	30	M12
250,0	1DG010-240	100	283	25	M12
250,0	1DG010-252	100	285	35	M12

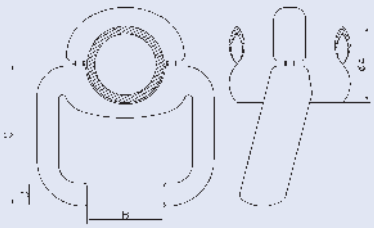

2,5“	1DG010-081	100	171	25	M12
2,5“	1DG010-080	100	173	30	M12
2,5“	1DG010-083	130	173	30	M12
3,5“	1DG010-100	100	185	30	M12
3,5“	1DG010-105	120	226	25	M12
3,5“	1DG010-103	120	231	35	M12
4“	1DG010-120	170	228	35	M12
4,5“	1DG010-120	170	228	35	M12
5“	1DG010-155	170	250	25	M12
5“	1DG010-153	170	270	30	M12
5“	1DG010-152	170	255	35	M12
8“	1DG010-220	120	267	35	M12

AL-Straight-Duplex-Connector

Conductor-Conductor

Dim. of Conductor				Code	Technical Data of Connector						
ØA		ØB			Max. Current	Dim. of Connector				Bolt Dim.	
Min.	Max.	Min.	Max.			C	D	E	F	ØA	ØB
24,1	33,0	33,1	42,0	1FA570-403	3200	400	100	144	118	M10	M10
24,1	33,0	33,1	42,0	1FA570-406	3200	500	100	144	118	M10	M10
33,1	42,0	42,1	52,0	1FA570-407	3200	400	100	136	130	M10	M10

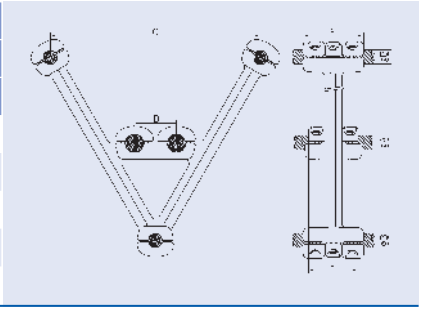

AL-Straight-Duplex-Connector

Tube-Conductor

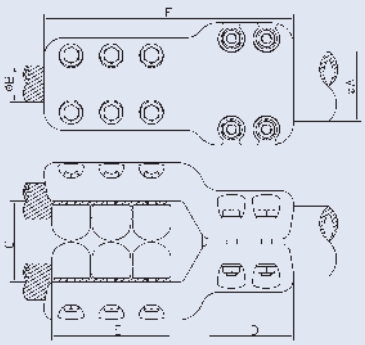

Dim. of Conductor			Code	Technical Data of Connector						
ØA	ØB			Max. Current	Dim. of Connector				Bolt Dim.	
	Min.	Max.			C	D	E	F	ØA	ØB
63,0	24,1	33,0	1FA015-036	2500	90	87	118	242	M10	M10
63,0	33,1	42,0	1FA015-056	3200	100	91	118	251	M10	M10
63,0	42,1	44,0	1FA015-053	3200	100	91	118	251	M10	M10
80,0	24,1	33,0	1FA015-042	3200	90	92	118	238	M12	M10
100,0	33,1	42,0	1FA015-051	3200	90	106	118	270	M12	M10
100,0	33,1	42,0	1FA017-019	2000	200	91	136	245	M12	M10
120,0	33,1	42,0	1FA010-073	3200	60	90	127	245	M12	M10
120,0	33,1	42,0	1FA020-122	3000	100	90	127	254	M12	M10
120,0	33,1	42,0	1FA017-024	3200	200	90	118	256	M12	M10
120,0	42,1	44,0	1FA015-054	3200	100	90	118	240	M12	M10
140,0	24,1	33,0	1FA015-063	2500	80	100	118	252	M12	M10
140,0	33,1	42,0	1FA010-079	3200	60	90	127	249	M12	M10
140,0	33,1	42,0	1FA020-039	3200	90	117	118	270	M12	M10
140,0	33,1	42,0	1FA015-064	3200	100	90	118	245	M12	M10
140,0	33,1	42,0	1FA017-027	3200	150	95	136	245	M12	M10
140,0	33,1	42,0	1FA017-025	3200	200	90	136	244	M12	M10
140,0	44,1	52,0	1FA017-202	3150	200	90	146	286	M12	M10
150,0	24,1	33,0	1FA015-063	2500	80	100	118	252	M12	M10
150,0	33,1	42,0	1FA010-079	3200	60	90	127	249	M12	M10
150,0	33,1	42,0	1FA020-039	3200	90	117	118	270	M12	M10
150,0	33,1	42,0	1FA015-064	3200	100	90	118	245	M12	M10
150,0	33,1	42,0	1FA017-027	3200	150	95	136	245	M12	M10
150,0	33,1	42,0	1FA017-025	3200	200	90	136	244	M12	M10
150,0	44,1	52,0	1FA017-202	3150	200	90	146	286	M12	M10
160,0	24,1	33,0	1FA015-063	2500	80	100	118	252	M12	M10
160,0	33,1	42,0	1FA010-079	3200	60	90	127	249	M12	M10
160,0	33,1	42,0	1FA020-039	3200	90	117	118	270	M12	M10
160,0	33,1	42,0	1FA015-064	3200	100	90	118	245	M12	M10
160,0	33,1	42,0	1FA017-027	3200	150	95	136	245	M12	M10
160,0	33,1	42,0	1FA017-025	3200	200	90	136	244	M12	M10
160,0	44,1	52,0	1FA017-202	3150	200	90	146	286	M12	M10
200,0	33,1	42,0	1FA010-200	3200	60	96	136	249	M12	M10
200,0	33,1	42,0	1FA020-200	3200	90	92	127	253	M12	M10
200,0	33,1	42,0	1FA020-201	4000	200	96	127	253	M12	M10
200,0	52,1	63,0	1FA017-201	4000	200	90	136	265	M12	M10
250,0	24,1	33,0	1FA020-250	2500	100	90	118	250	M12	M10
250,0	33,1	42,0	1FA015-250	4000	100	90	127	250	M12	M10

AL-Straight-Duplex-Connector

Tube-Conductor

Dim. of Conductor			Code	Technical Data of Connector						
ØA	ØB			Max. Current	Dim. of Connector				Bolt Dim.	
	Min.	Max.			C	D	E	F	ØA	ØB
2“	24,1	33,0	1FA015-036	2500	90	87	118	242	M10	M10
2“	33,1	42,0	1FA015-056	3200	100	91	118	251	M10	M10
2“	42,1	44,0	1FA015-053	3200	100	91	118	251	M10	M10
2,5“	24,1	33,0	1FA015-042	3200	90	92	118	238	M12	M10
3,5“	33,1	42,0	1FA015-051	3200	90	106	118	270	M12	M10
3,5“	33,1	42,0	1FA017-019	2000	200	91	136	245	M12	M10
4“	33,1	42,0	1FA010-073	3200	60	90	127	245	M12	M10
4“	33,1	42,0	1FA020-122	3000	100	90	127	254	M12	M10
4“	33,1	42,0	1FA017-024	3200	200	90	118	256	M12	M10
4“	42,1	44,0	1FA015-054	3200	100	90	118	240	M12	M10
4,5“	33,1	42,0	1FA010-073	3200	60	90	127	245	M12	M10
4,5“	33,1	42,0	1FA020-122	3000	100	90	127	254	M12	M10
4,5“	33,1	42,0	1FA017-024	3200	200	90	118	256	M12	M10
4,5“	42,1	44,0	1FA015-054	3200	100	90	118	240	M12	M10
5“	24,1	33,0	1FA015-063	2500	80	100	118	252	M12	M10
5“	33,1	42,0	1FA010-079	3200	60	90	127	249	M12	M10
5“	33,1	42,0	1FA020-039	3200	90	117	118	270	M12	M10
5“	33,1	42,0	1FA015-064	3200	100	90	118	245	M12	M10
5“	33,1	42,0	1FA017-027	3200	150	95	136	245	M12	M10
5“	33,1	42,0	1FA017-025	3200	200	90	136	244	M12	M10
5“	44,1	52,0	1FA017-202	3150	200	90	146	286	M12	M10

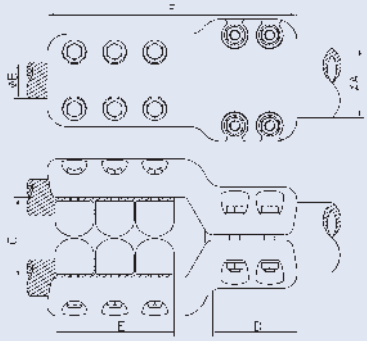

63,0	33,1	42,0	1FA015-050	3200	90	127	118	295	M10	M10
63,0	42,1	44,0	1FA015-049	1600	90	127	118	295	M10	M10
80,0	33,1	42,0	1FA015-047	4000	90	131	136	325	M12	M10
2“	33,1	42,0	1FA015-050	3200	90	127	118	295	M10	M10
2“	42,1	44,0	1FA015-049	1600	90	127	118	295	M10	M10
2,5“	33,1	42,0	1FA015-047	4000	90	131	136	325	M12	M10

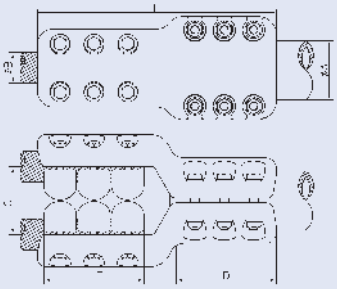

AL-Straight-Duplex-Connector

Tube-Conductor

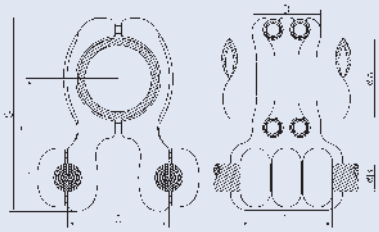

Dim. of Conductor			Code	Technical Data of Connector							
ØA	ØB			Max. Current	Dim. of Connector					Bolt Dim.	
	Min.	Max.			C	D	E	F	G	ØA	ØB
80,0	33,1	42,0	1FA115-006	3200	100	102	118	125	244	M12	M10
120,0	33,1	42,0	1FA115-012	3200	90	102	118	150	291	M12	M10
120,0	42,1	44,0	1FA115-013	3200	90	102	118	150	291	M12	M10
120,0	42,1	44,0	1FA115-127	3200	150	102	136	145	285	M12	M10
120,0	44,1	52,0	1FA115-127	3200	150	102	136	145	285	M12	M10
140,0	24,1	33,0	1FA115-018	2500	90	102	118	160	316	M12	M10
140,0	33,1	42,0	1FA115-021	3200	90	102	118	175	338	M12	M10
140,0	33,1	42,0	1FA115-020	4000	100	102	118	170	327	M12	M10
140,0	42,1	44,0	1FA115-022	3200	90	102	118	175	338	M12	M10
140,0	42,1	44,0	1FA115-216	5000	150	102	136	166	326	M12	M10
140,0	44,1	52,0	1FA115-216	5000	150	102	136	166	326	M12	M10
150,0	24,1	33,0	1FA115-018	2500	90	102	118	160	316	M12	M10
150,0	33,1	42,0	1FA115-021	3200	90	102	118	175	338	M12	M10
150,0	33,1	42,0	1FA115-020	4000	100	102	118	170	327	M12	M10
150,0	42,1	44,0	1FA115-022	3200	90	102	118	175	338	M12	M10
150,0	42,1	44,0	1FA115-216	5000	150	102	136	166	326	M12	M10
150,0	44,1	52,0	1FA115-216	5000	150	102	136	166	326	M12	M10
160,0	24,1	33,0	1FA115-018	2500	90	102	118	160	316	M12	M10
160,0	33,1	42,0	1FA115-021	3200	90	102	118	175	338	M12	M10
160,0	33,1	42,0	1FA115-020	4000	100	102	118	170	327	M12	M10
160,0	42,1	44,0	1FA115-022	3200	90	102	118	175	338	M12	M10
160,0	42,1	44,0	1FA115-216	5000	150	102	136	166	326	M12	M10
160,0	44,1	52,0	1FA115-216	5000	150	102	136	166	326	M12	M10
200,0	24,1	33,0	1FA115-024	2500	90	102	118	175	351	M12	M10
200,0	42,1	44,0	1FA115-029	1600	90	102	130	185	363	M12	M10
200,0	42,1	44,0	1FA115-215	5000	150	102	162	175	355	M12	M10
200,0	44,1	52,0	1FA115-215	5000	150	102	162	175	355	M12	M10
250,0	24,1	33,0	1FA115-031	2500	90	102	118	197	397	M12	M10
250,0	33,1	42,0	1FA115-034	3200	90	102	118	203	410	M12	M10
250,0	42,1	44,0	1FA115-035	3200	90	102	142	203	406	M12	M10

AL-Straight-Duplex-Connector

Tube-Conductor

Dim. of Conductor			Code	Technical Data of Connector							
ØA	ØB			Max. Current	Dim. of Connector					Bolt Dim.	
	Min.	Max.			C	D	E	F	G	ØA	ØB
2,5“	33,1	42,0	1FA115-006	3200	100	102	118	125	244	M12	M10
4“	33,1	42,0	1FA115-012	3200	90	102	118	150	291	M12	M10
4“	42,1	44,0	1FA115-013	3200	90	102	118	150	291	M12	M10
4“	42,1	44,0	1FA115-127	3200	150	102	136	145	285	M12	M10
4“	44,1	52,0	1FA115-127	3200	150	102	136	145	285	M12	M10
4,5“	33,1	42,0	1FA115-012	3200	90	102	118	150	291	M12	M10
4,5“	42,1	44,0	1FA115-013	3200	90	102	118	150	291	M12	M10
4,5“	42,1	44,0	1FA115-127	3200	150	102	136	145	285	M12	M10
4,5“	44,1	52,0	1FA115-127	3200	150	102	136	145	285	M12	M10
5“	24,1	33,0	1FA115-018	2500	90	102	118	160	316	M12	M10
5“	33,1	42,0	1FA115-021	3200	90	102	118	175	338	M12	M10
5“	33,1	42,0	1FA115-020	4000	100	102	118	170	327	M12	M10
5“	42,1	44,0	1FA115-022	3200	90	102	118	175	338	M12	M10
5“	42,1	44,0	1FA115-216	5000	150	102	136	166	326	M12	M10
5“	44,1	52,0	1FA115-216	5000	150	102	136	166	326	M12	M10
6“	33,1	42,0	1FA115-017	4000	100	102	118	175	335	M12	M10
8“	24,1	33,0	1FA115-220	3200	80	102	118	186	366	M12	M10

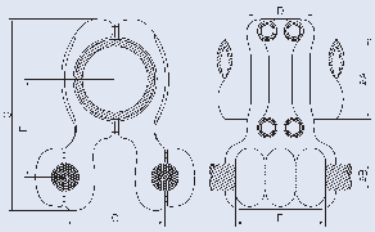

100,0	33,1	42,0	1FA115-100	3200	90	102	176	130	258	M12	M10
140,0	33,1	42,0	1FA115-150	3200	90	102	176	160	320	M12	M10
150,0	33,1	42,0	1FA115-150	3200	90	102	176	160	320	M12	M10
160,0	33,1	42,0	1FA115-150	3200	90	102	176	160	320	M12	M10
250,0	33,1	42,0	1FA115-254	3200	90	102	176	210	414	M12	M10
3,5“	33,1	42,0	1FA115-100	3200	90	102	176	130	258	M12	M10
5“	33,1	42,0	1FA115-150	3200	90	102	176	160	320	M12	M10

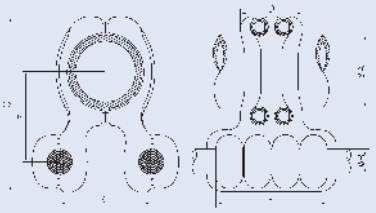

AL-Straight-Duplex-Connector

Tube-Conductor

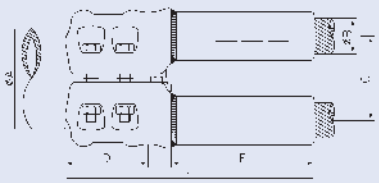

Dim. of Conductor			Code	Technical Data of Connector						
ØA	ØB			Max. Current	Dim. of Connector				Bolt Dim. ØA	Inst. Die No.
	Min.	Max.			C	D	E	F		
120,0	36,1	37,1	1FA080-120	2700	100	90	170	296	M12	KZ 58
140,0	36,1	37,1	1FA080-160	2700	100	90	170	296	M12	KZ 58
140,0	36,1	37,1	1FA080-161	2700	200	90	170	296	M12	KZ 58
140,0	40,6	41,3	1FA080-140	3200	150	90	170	305	M12	KZ 62
140,0	42,1	43,2	1FA080-162	2700	100	90	170	296	M12	KZ 63
150,0	36,1	37,1	1FA080-160	2700	100	90	170	296	M12	KZ 58
150,0	36,1	37,1	1FA080-161	2700	200	90	170	296	M12	KZ 58
150,0	40,6	41,3	1FA080-140	3200	150	90	170	305	M12	KZ 62
150,0	42,1	43,2	1FA080-162	2700	100	90	170	296	M12	KZ 63
160,0	36,1	37,1	1FA080-160	2700	100	90	170	296	M12	KZ 58
160,0	36,1	37,1	1FA080-161	2700	200	90	170	296	M12	KZ 58
160,0	40,6	41,3	1FA080-140	3200	150	90	170	305	M12	KZ 62
160,0	42,1	43,2	1FA080-162	2700	100	90	170	296	M12	KZ 63
4“	36,1	37,1	1FA080-120	2700	100	90	170	296	M12	KZ 58
4,5“	36,1	37,1	1FA080-120	2700	100	90	170	296	M12	KZ 58
5“	36,1	37,1	1FA080-160	2700	100	90	170	296	M12	KZ 58
5“	36,1	37,1	1FA080-161	2700	200	90	170	296	M12	KZ 58
5“	40,6	41,3	1FA080-140	3200	150	90	170	305	M12	KZ 62
5“	42,1	43,2	1FA080-162	2700	100	90	170	296	M12	KZ 63

AL-Straight-Duplex-Connector

Tube-Conductor

Dim. of Conductor			Code	Technical Data of Connector						
ØA	ØB			Max. Current	Dim. of Connector				Bolt Dim.	
	Min.	Max.			C	D	E	F	ØA	ØB
63,0	24,1	33,0	1FA615-009	4000	80	103	118	265	2/M12	3/M10
63,0	24,1	33,0	1FA615-003	3200	100	126	78	232	3/M10	2/M10
63,0	24,1	33,0	1FA742-001	3000	250	102	96	102	2/M12	3/M10
63,0	33,1	42,0	1FA615-061	2000	200	91	136	136	2/M12	3/M10
63,0	33,1	42,0	1FA615-062	4800	200	142	136	142	3/M12	3/M10
80,0	33,1	42,0	1FA615-029	3500	90	131	78	255	3/M12	2/M10
80,0	33,1	42,0	1FA742-127	3000	200	91	118	150	2/M12	3/M10
100,0	33,1	42,0	1FA615-032	4500	90	91	118	250	2/M12	3/M10
120,0	42,1	52,0	1FA742-005	4000	200	91	142	257	2/M12	2/M10
140,0	24,1	33,0	1FA615-150	2850	150	90	145	257	2/M12	2/M10
140,0	33,1	42,0	1FA615-021	4000	90	85	78	239	2/M12	2/M10
140,0	42,1	52,0	1FA730-180	5000	150	102	162	162	2/M12	3/M10
150,0	24,1	33,0	1FA615-150	2850	150	90	145	257	2/M12	2/M10
150,0	33,1	42,0	1FA615-021	4000	90	85	78	239	2/M12	2/M10
150,0	42,1	52,0	1FA730-180	5000	150	102	162	162	2/M12	3/M10
160,0	24,1	33,0	1FA615-150	2850	150	90	145	257	2/M12	2/M10
160,0	33,1	42,0	1FA615-021	4000	90	85	78	239	2/M12	2/M10
160,0	42,1	52,0	1FA730-180	5000	150	102	162	162	2/M12	3/M10
200,0	24,1	33,0	1FA615-202	3200	200	90	145	251	2/M12	2/M10
200,0	33,1	42,0	1FA615-036	4000	80	120	133	294	2/M12	2/M10
200,0	42,1	52,0	1FA730-200	5000	150	102	162	162	2/M12	3/M10
250,0	24,1	33,0	1FA615-250	5000	100	91	118	250	2/M12	3/M10
2“	24,1	33,0	1FA615-009	4000	80	103	118	265	2/M12	3/M10
2“	24,1	33,0	1FA615-003	3200	100	126	78	232	3/M10	2/M10
2“	24,1	33,0	1FA742-001	3000	250	102	96	102	2/M12	3/M10
2“	33,1	42,0	1FA615-061	2000	200	91	136	136	2/M12	3/M10
2“	33,1	42,0	1FA615-062	4800	200	142	136	142	3/M12	3/M10
2,5“	33,1	42,0	1FA615-029	3500	90	131	78	255	3/M12	2/M10
2,5“	33,1	42,0	1FA742-127	3000	200	91	118	150	2/M12	3/M10
3,5“	33,1	42,0	1FA615-032	4500	90	91	118	250	2/M12	3/M10
4“	42,1	52,0	1FA742-005	4000	200	91	142	257	2/M12	2/M10
4,5“	42,1	52,0	1FA742-005	4000	200	91	142	257	2/M12	2/M10
5“	24,1	33,0	1FA615-150	2850	150	90	145	257	2/M12	2/M10
5“	33,1	42,0	1FA615-021	4000	90	85	78	239	2/M12	2/M10
5“	42,1	52,0	1FA730-180	5000	150	102	162	162	2/M12	3/M10
8“	24,1	33,0	1FA615-027	4000	80	85	118	245	2/M12	3/M10

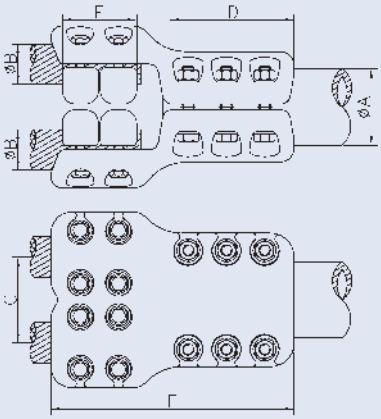

AL-Straight-Duplex-Terminal

Conductor-Stud

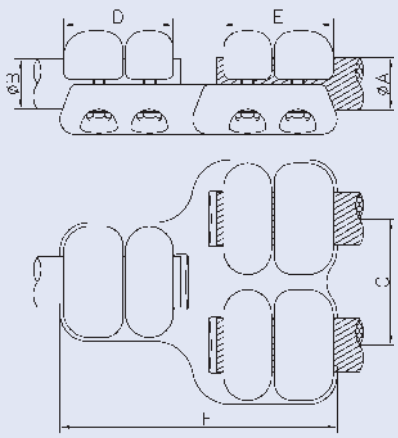

Dim. of Conductor			Code	Technical Data of Connector						
ØA		ØB		Max. Current	Dim. of Connector				Bolt Dim.	
Min.	Max.				C	D	E	F	ØA	ØB
24,1	33,0	30,0	1FA015-033	1600	80	78	87	200	M10	M10
24,1	33,0	40,0	1FA015-033	1600	80	78	87	200	M10	M10
33,1	42,0	30,0	1FA020-016	1600	100	87	90	220	M10	M10
33,1	42,0	30,0	1FA020-017	1600	200	87	90	220	M10	M10
33,1	42,0	40,0	1FA020-016	1600	100	87	90	220	M10	M10
33,1	42,0	40,0	1FA020-017	1600	200	87	90	220	M10	M10
33,1	42,0	50,0	1FA017-013	2500	200	96	90	212	M10	M10
52,1	63,0	30,0	1FA017-014	2000	200	90	90	230	M10	M10
52,1	63,0	30,0	1FA020-060	1400	400	122	96	180	M10	M10
52,1	63,0	40,0	1FA017-014	2000	200	90	90	230	M10	M10
52,1	63,0	40,0	1FA020-060	1400	400	122	96	180	M10	M10

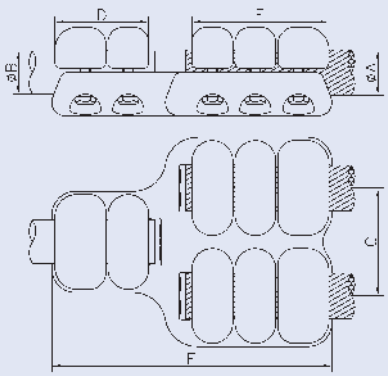

24,1	33,0	50,0	1FA015-036	2500	90	118	87	242	M10	M10
24,1	33,0	60,0	1FA015-036	2500	90	118	87	242	M10	M10
33,1	42,0	30,0	1FA015-031	2000	90	118	88	255	M10	M10
33,1	42,0	40,0	1FA015-031	2000	90	118	88	255	M10	M10
33,1	42,0	50,0	1FA015-038	2500	90	118	102	260	M10	M10
33,1	42,0	50,0	1FA015-056	3200	100	118	91	251	M10	M10
33,1	42,0	50,0	1FA017-011	2000	150	136	91	235	M10	M10
33,1	42,0	50,0	1FA017-016	2100	200	136	91	240	M10	M10
33,1	42,0	60,0	1FA015-056	3200	100	118	91	251	M10	M10
33,1	42,0	60,0	1FA017-011	2000	150	136	91	235	M10	M10
33,1	42,0	60,0	1FA017-016	2100	200	136	91	240	M10	M10
42,1	44,0	30,0	1FA017-009	2000	200	118	90	257	M10	M10
42,1	44,0	40,0	1FA017-009	2000	200	118	90	257	M10	M10
42,1	44,0	50,0	1FA015-053	3200	100	118	91	251	M10	M10
42,1	44,0	60,0	1FA015-053	3200	100	118	91	251	M10	M10
44,1	52,0	30,0	1FA017-009	2000	200	118	90	257	M10	M10
44,1	52,0	40,0	1FA017-009	2000	200	118	90	257	M10	M10

AL-Straight-Duplex-Terminal

Conductor-Stud

Dim. of Conductor			Code	Technical Data of Connector						
ØA		ØB		Max. Current	Dim. of Connector				Bolt Dim.	
Min.	Max.				C	D	E	F	ØA	ØB
24,1	33,0	30,0	1FA020-027	2000	100	136	127	276	M10	M10
24,1	33,0	40,0	1FA020-027	2000	100	136	127	276	M10	M10
33,1	42,0	30,0	1FA010-056	2000	60	136	130	285	M10	M10
33,1	42,0	30,0	1FA015-030	2000	90	118	128	295	M10	M10
33,1	42,0	30,0	1FA015-016	2000	150	136	130	275	M10	M10
33,1	42,0	40,0	1FA010-056	2000	60	136	130	285	M10	M10
33,1	42,0	40,0	1FA015-030	2000	90	118	128	295	M10	M10
33,1	42,0	40,0	1FA015-016	2000	150	136	130	275	M10	M10
33,1	42,0	50,0	1FA010-063	2500	60	136	145	300	M10	M10
33,1	42,0	50,0	1FA015-050	3200	90	118	127	295	M10	M10
33,1	42,0	60,0	1FA010-049	3200	60	136	145	292	M10	M10
33,1	42,0	60,0	1FA015-050	3200	90	118	127	295	M10	M10
42,1	44,0	50,0	1FA015-049	1600	90	118	127	295	M10	M10
42,1	44,0	60,0	1FA015-049	1600	90	118	127	295	M10	M10

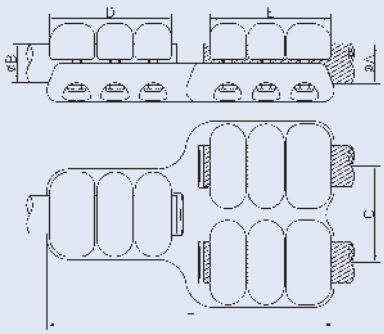

AL-Straight-Duplex-Terminal

Stud-Conductor

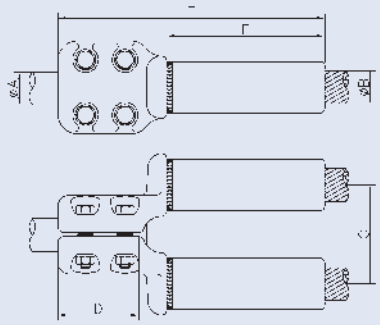

Dim. of Conductor			Code	Technical Data of Connector						
ØA	ØB			Max. Current	Dim. of Connector				Bolt Dim. ØA	Inst. Die No.
	Min.	Max.			C	D	E	F		
30,0	26,1	26,9	1FA080-013	1800	100	90	105	215	M10	KZ 42
30,0	29,0	29,9	1FA080-015	2000	100	90	160	270	M10	KZ 46
30,0	31,7	32,8	1FA080-018	2000	100	90	160	270	M10	KZ 52
30,0	36,1	37,1	1FA080-020	2000	200	90	170	290	M10	KZ 58
30,0	37,2	38,6	1FA080-021	2000	100	90	170	280	M10	KZ 60
30,0	42,1	43,2	1FA080-008	2000	100	90	170	280	M10	KZ 63
30,0	45,6	47,0	1FA080-023	2000	150	90	210	330	M10	KZ 70
40,0	26,1	26,9	1FA080-013	1800	100	90	105	215	M10	KZ 42
40,0	27,5	28,4	1FA080-026	1900	200	90	105	225	M10	KZ 42
40,0	29,0	29,9	1FA080-015	2000	100	90	160	270	M10	KZ 46
40,0	31,7	32,8	1FA080-018	2000	100	90	160	270	M10	KZ 52
40,0	36,1	37,1	1FA080-020	2000	200	90	170	290	M10	KZ 58
40,0	37,2	38,6	1FA080-021	2000	100	90	170	280	M10	KZ 60
40,0	42,1	43,2	1FA080-008	2000	100	90	170	280	M10	KZ 63
40,0	45,6	47,0	1FA080-023	2000	150	90	210	330	M10	KZ 70
50,0	27,5	28,4	1FA080-026	1900	200	90	105	225	M10	KZ 42
50,0	31,7	32,9	1FA080-027	2000	85	90	160	269	M10	KZ 52
60,0	31,7	32,9	1FA080-027	2000	85	90	160	269	M10	KZ 52

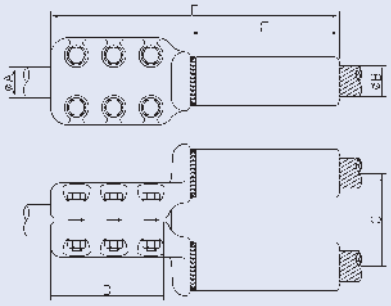

40,0	31,7	32,8	1FA080-025	3000	100	130	160	320	M10	KZ 52
40,0	42,1	43,3	1FA080-028	3000	100	130	170	330	M10	KZ 63
50,0	31,7	32,8	1FA080-025	3000	100	130	160	320	M10	KZ 52
50,0	42,1	43,3	1FA080-028	3000	100	130	170	330	M10	KZ 63

AL-Straight-Duplex-Flat Terminal

Conductor-Flat Terminal

Dim. of Conductor				Code	Technical Data of Connector						
ØA		C	D		Max. Current	Dim. of Connector					Bolt Dim. ØA
Min.	Max.					E	F	G	H	L	
24,1	33,0	80	80	1GA030-063	1600	20	200	20	96	186	M10
24,1	33,0	100	100	1GA020-105	1600	20	80	55	87	205	M10
24,1	33,0	100	100	1GA030-060	1600	20	200	20	96	206	M10
24,1	33,0	125	125	1GA020-221	1500	15	150	60	145	288	M10
24,1	33,0	125	125	1GA030-451	2000	20	450	40	96	125	M10
52,1	63,0	125	125	1GA020-070	4000	30	100	70	90	253	M10

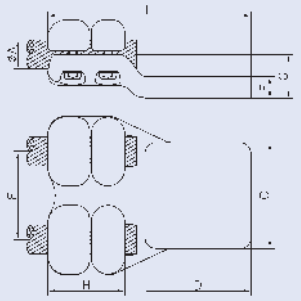

24,1	33,0	100	100	1GA010-031	2500	25	60	75	144	268	M10
24,1	33,0	100	100	1GA020-108	2000	20	100	55	136	251	M10
24,1	33,0	100	100	1GA030-084	2000	25	200	25	136	146	M10
24,1	33,0	100	100	1GA030-061	2000	20	300	20	136	301	M10
24,1	33,0	100	100	1GA030-450	3200	25	450	45	136	151	M10
24,1	33,0	120	120	1GA020-083	2500	25	100	50	127	270	M10
24,1	33,0	200	100	1GA020-087	2400	20	90	50	127	247	M10
33,1	42,0	75	75	1GA010-051	1600	25	60	70	136	224	M10
33,1	42,0	75	75	1GA020-126	1600	30	90	57	127	212	M10
33,1	42,0	80	80	1GA010-029	3200	30	60	79	136	225	M10
33,1	42,0	80	80	1GA020-129	2000	30	90	57	127	217	M10
33,1	42,0	100	100	1GA010-032	3200	30	60	79	136	245	M10
33,1	42,0	100	100	1GA020-171	3150	35	90	65	127	251	M10
33,1	42,0	100	100	1GA030-093	3200	25	200	50	136	245	M10
33,1	42,0	100	100	1GA030-330	2000	25	330	50	136	169	M10
33,1	42,0	125	125	1GA020-180	3200	30	90	57	127	262	M10
33,1	42,0	125	125	1GA020-142	3200	20	100	65	136	295	M10
33,1	42,0	125	125	1GA030-051	3200	25	150	50	136	280	M10
33,1	42,0	125	125	1GA030-095	3200	25	200	50	136	270	M10
33,1	42,0	125	125	1GA020-146	3200	25	300	60	136	295	M10
33,1	42,0	200	100	1GA010-046	3200	25	60	75	136	260	M10
33,1	42,0	200	100	1GA020-186	3200	25	90	52	127	247	M10
33,1	42,0	200	100	1GA020-188	3200	25	100	85	118	265	M10
33,1	42,0	200	100	1GA030-054	3200	25	150	50	136	255	M10
33,1	42,0	200	100	1GA030-099	3200	25	200	50	136	245	M10
42,1	44,0	100	100	1GA010-069	2000	25	70	75	130	262	M10
42,1	44,0	80	80	1GA020-215	2500	30	150	47	136	250	M10
42,1	44,0	100	100	1GA020-197	2500	30	100	60	136	256	M10
42,1	44,0	100	100	1GA020-210	3200	35	150	62	136	275	M10
42,1	44,0	120	120	1GA010-070	3200	25	70	75	130	268	M10

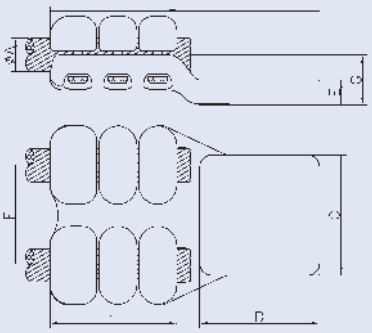

AL-Straight-Duplex-Flat Terminal

Conductor-Flat Terminal

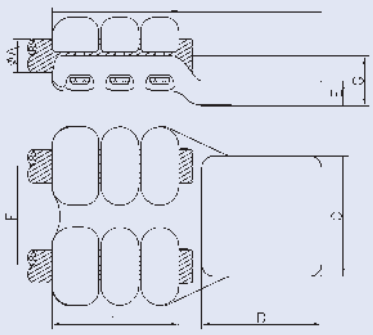

Dim. of Conductor				Code	Technical Data of Connector						
ØA		C	D		Max. Current	Dim. of Connector					Bolt Dim. ØA
Min.	Max.					E	F	G	H	L	
42,1	44,0	125	125	1GA020-213	3200	30	100	60	136	281	M10
42,1	44,0	125	125	1GA020-220	3200	30	150	57	136	300	M10
42,1	44,0	200	100	1GA020-199	3200	25	100	85	127	265	M10
42,1	44,0	200	100	1GA020-225	4000	35	150	62	136	275	M10
42,1	44,0	200	100	1GA030-127	4000	30	450	30	136	166	M10
44,1	52,0	80	80	1GA020-215	2500	30	150	47	136	250	M10
44,1	52,0	100	100	1GA020-210	3200	35	150	62	136	275	M10
44,1	52,0	125	125	1GA020-220	3200	30	150	57	136	300	M10
44,1	52,0	200	100	1GA020-225	4000	35	150	62	136	275	M10
44,1	52,0	200	100	1GA030-127	4000	30	450	30	136	166	M10
52,1	63,0	200	100	1GA030-030	3200	30	200	80	136	275	M10
52,1	63,0	200	100	1GA030-141	4000	30	400	30	168	197	M10

AL-Straight-Duplex-Flat Terminal

Conductor-Flat Terminal

Dim. of Conductor				Code	Technical Data of Connector						
ØA		C	D		Max. Current	Dim. of Connector					Bolt Dim. ØA
Min.	Max.					E	F	G	H	L	
24,1	33,0	80	80	1GA220-016	2000	25	200	25	136	243	M10
24,1	33,0	100	100	1GA212-005	2500	30	50	75	144	290	M10
24,1	33,0	100	100	1GA212-003	2500	30	60	75	144	280	M10
24,1	33,0	100	100	1GA212-010	2500	30	100	95	144	295	M10
33,1	42,0	80	80	1GA220-024	1600	30	200	30	136	235	M10
33,1	42,0	100	100	1GA220-017	2500	30	100	30	136	264	M10
33,1	42,0	100	100	1GA220-021	2000	30	200	30	136	255	M10
33,1	42,0	125	125	1GA220-026	3200	25	90	25	136	288	M10
33,1	42,0	200	100	1GA220-022	3200	20	100	20	136	264	M10
52,1	63,0	125	125	1GA220-407	4000	35	400	35	168	314	M10

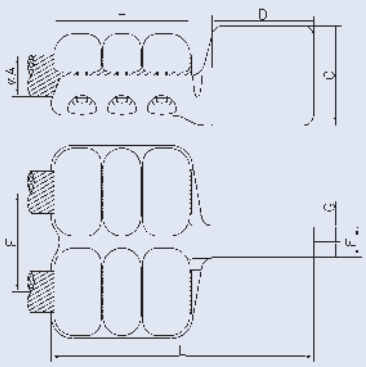

AL-Straight-Duplex-Flat Terminal

Conductor-Flat Terminal

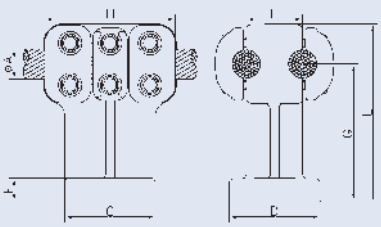

Dim. of Conductor				Code	Technical Data of Connector						
ØA		C	D		Max. Current	Dim. of Connector					Bolt Dim. ØA
Min.	Max.					E	F	G	H	L	
24,1	33,0	100	100	1GA230-002	2500	25	60	150	144	194	M10
33,1	42,0	100	100	1GA230-040	3200	25	100	150	136	197	M10
33,1	42,0	100	100	1GA231-040	2500	25	100	250	136	291	M10
33,1	42,0	100	100	1GA231-045	2500	25	150	140	136	181	M10
33,1	42,0	100	100	1GA231-056	2500	25	200	140	136	181	M10
33,1	42,0	200	100	1GA230-060	3200	25	100	150	136	197	M10
33,1	42,0	200	100	1GA231-055	3200	25	200	140	136	181	M10

AL-Straight-Triplex-Connector

Tube-Conductor

Dim. of Conductor			Code	Technical Data of Connector						
ØA	ØB			Max. Current	Dim. of Connector				Bolt Dim.	
	Min.	Max.			C	D	E	F	ØA	ØB
63,0	24,1	33,0	1FA410-003	3150	90	136	144	310	3/M10	3/M10
63,0	33,1	42,0	1FA415-009	3200	90	131	118	290	3/M10	3/M10
140,0	33,1	42,0	1FA415-003	4000	90	90	118	270	2/M12	3/M10
150,0	33,1	42,0	1FA415-003	4000	90	90	118	270	2/M12	3/M10
160,0	33,1	42,0	1FA415-003	4000	90	90	118	270	2/M12	3/M10
2″	24,1	33,0	1FA410-003	3150	90	136	144	310	3/M10	3/M10
2″	33,1	42,0	1FA415-009	3200	90	131	118	290	3/M10	3/M10
5″	33,1	42,0	1FA415-003	4000	90	90	118	270	2/M12	3/M10

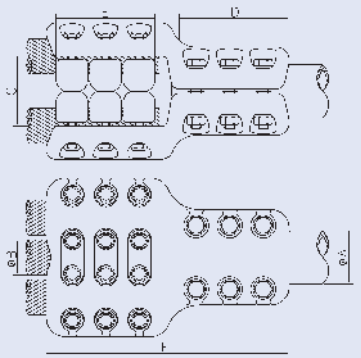

63,0	33,1	42,0	1FA420-010	3200	100	145	127	295	3/M10	3/M10
80,0	42,1	44,0	1FA420-080	4000	100	130	136	296	3/M12	3/M10
100,0	33,1	42,0	1FA420-100	2600	90	98	136	245	3/M12	3/M10
120,0	33,1	42,1	1FA420-003	4000	100	130	176	330	3/M12	4/M10
120,0	33,1	42,0	1FA425-122	3200	100	148	136	154	3/M12	3/M10
140,0	33,1	42,0	1FA420-160	5000	100	130	176	330	3/M12	4/M10
150,0	33,1	42,0	1FA420-160	5000	100	130	176	330	3/M12	4/M10
160,0	33,1	42,0	1FA420-160	5000	100	130	176	330	3/M12	4/M10
200,0	33,1	42,0	1FA420-200	6000	90	140	118	300	3/M12	3/M10
250,0	33,1	42,0	1FA420-250	6000	100	130	167	320	3/M12	4/M10
2″	33,1	42,0	1FA420-010	3200	100	145	127	295	3/M10	3/M10
2,5″	42,1	44,0	1FA420-080	4000	100	130	136	296	3/M12	3/M10
3,5″	33,1	42,0	1FA420-100	2600	90	98	136	245	3/M12	3/M10
4″	33,1	42,1	1FA420-003	4000	100	130	176	330	3/M12	4/M10
4″	33,1	42,0	1FA425-122	3200	100	148	136	154	3/M12	3/M10
4,5″	33,1	42,1	1FA420-003	4000	100	130	176	330	3/M12	4/M10
4,5″	33,1	42,0	1FA425-122	3200	100	148	136	154	3/M12	3/M10
5″	33,1	42,0	1FA420-160	5000	100	130	176	330	3/M12	4/M10

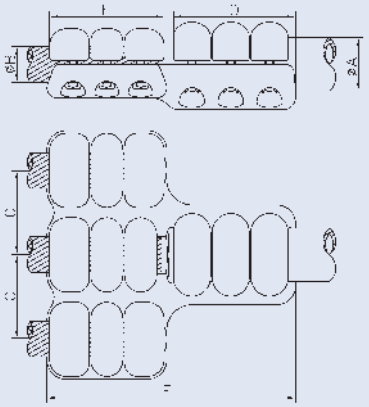

AL-Straight-Triplex-Flat Terminal

Conductor-Flat Terminal

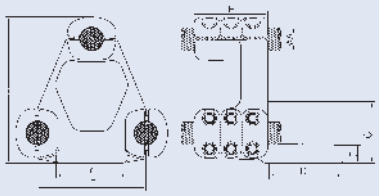

Dim. of Conductor				Code	Technical Data of Connector						
ØA		C	D		Max. Current	Dim. of Connector					Bolt Dim. ØA
Min.	Max.					E	F	G	H	L	
33,1	42,0	100	100	1GA310-042	3000	30	100	-	214	335	M10
33,1	42,0	100	100	1GA315-200	2400	25	200	25	96	210	M10
33,1	42,0	125	125	1GA315-230	3150	30	200	113	136	284	M10
33,1	42,0	125	125	1GA315-331	3000	25	330	8	136	299	M10
33,1	42,0	200	100	1GA312-010	3200	30	100	110	136	354	M10
33,1	42,0	200	100	1GA315-333	4000	25	330	167	136	284	M10

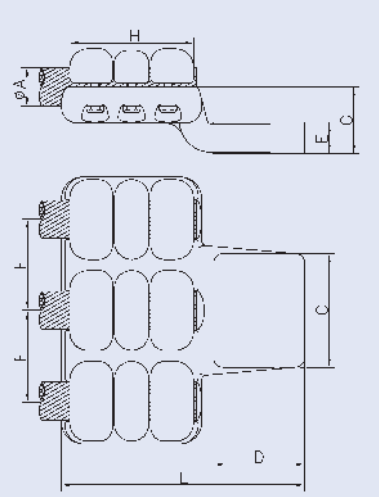

24,1	33,0	100	100	1GA320-003	2500	25	100	60	136	251	M10
24,1	33,0	200	100	1GA320-005	4000	20	100	45	136	245	M10
33,1	42,0	100	100	1GA320-102	3150	35	100	74	136	267	M10
33,1	42,0	125	125	1GA320-006	4000	35	90	74	136	270	M10
33,1	42,0	125	125	1GA320-125	4000	35	100	74	136	292	M10
33,1	42,0	200	100	1GA320-012	4000	25	100	65	136	248	M10
33,1	42,0	200	100	1GA320-200	4000	25	200	41	136	263	M10
42,1	44,0	200	100	1GA320-013	4000	25	100	62	136	248	M10

AL-Straight-Quadruple-Terminal

Conductor-Stud

Dim. of Conductor			Code	Technical Data of Connector						
ØA	ØB			Max. Current	Dim. of Connector				Bolt Dim.	
	Min.	Max.			C	D	E	F	ØA	ØB
24,1	33,0	30,0	1FA615-020	3200	200	104	140	140	2/M10	3/M10
24,1	33,0	40,0	1FA615-020	3200	200	104	140	140	2/M10	3/M10
24,1	33,0	50,0	1FA615-009	4000	80	103	118	265	3/M10	2/M12
24,1	33,0	50,0	1FA615-003	3200	100	126	78	232	2/M10	3/M10
24,1	33,0	50,0	1FA742-001	3000	250	96	102	102	2/M10	2/M12
24,1	33,0	60,0	1FA615-009	4000	80	103	118	265	3/M10	2/M12
24,1	33,0	60,0	1FA615-003	3200	100	126	78	232	2/M10	3/M10
24,1	33,0	60,0	1FA742-001	3000	250	96	102	102	2/M10	2/M12
33,1	42,0	50,0	1FA615-061	2000	200	136	91	136	3/M10	2/M12
33,1	42,0	50,0	1FA615-062	4800	200	136	142	142	3/M10	3/M12
33,1	42,0	60,0	1FA615-061	2000	200	136	91	136	3/M10	2/M12
33,1	42,0	60,0	1FA615-062	4800	200	136	142	142	3/M10	3/M12

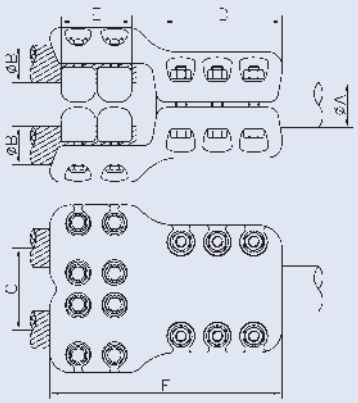

AL-Straight-Quadruple-Flat Terminal

Conductor-Flat Terminal

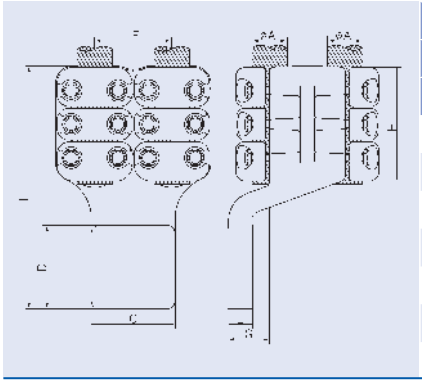

Dim. of Conductor				Code	Technical Data of Connector						
ØA		C	D		Max. Current	Dim. of Connector					Bolt Dim. ØA
Min.	Max.					E	F	G	H	L	
24,1	33,0	100	100	1GA410-060	4000	25	80	13	144	258	M10
24,1	33,0	200	100	1GA410-021	4000	30	90	90	144	285	M10
33,1	42,0	100	100	1GA410-038	3150	30	90	95	136	290	M10
33,1	42,0	200	100	1GA410-013	4000	30	100	15	136	244	M10

AL-Duplex-Parallel-Groove-Clamp

Conductor-Conductor

Dimension of Conductor				Code	Technical Data of Connector						
ØA		ØB			Max. Current	Dim. of Connector				Caps/Bolts	
Min.	Max.	Min.	Max.			C	D	E	F	Dim.	Pcs.
33,1	36,0	24,1	33,0	1PE100-080	3200	136	183	90	90	M10	3
33,1	36,0	33,1	42,0	1PE100-070	3200	136	183	60	90	M10	3
33,1	36,0	33,1	42,0	1PE100-075	4000	136	183	90	90	M10	3
36,1	39,0	24,1	33,0	1PE100-080	3200	136	183	90	90	M10	3
36,1	39,0	33,1	36,0	1PE100-070	3200	136	183	60	90	M10	3
36,1	39,0	36,1	39,0	1PB100-170	2000	150	115	60	60	M12	3
36,1	39,0	33,1	42,0	1PE100-075	4000	136	183	90	90	M10	3
39,1	42,0	24,1	33,0	1PE100-080	3200	136	183	90	90	M10	3
39,1	42,0	33,1	42,0	1PE100-070	3200	136	183	60	90	M10	3
39,1	42,0	33,1	42,0	1PE100-075	4000	136	183	90	90	M10	3
39,1	42,0	39,1	42,0	1PB100-130	3200	210	112	60	60	M14	5
42,1	44,0	42,1	44,0	1PE100-130	2500	170	200	70	100	M10	3
44,1	52,0	44,1	52,0	1PE100-180	4500	130	264	80	150	M10	3

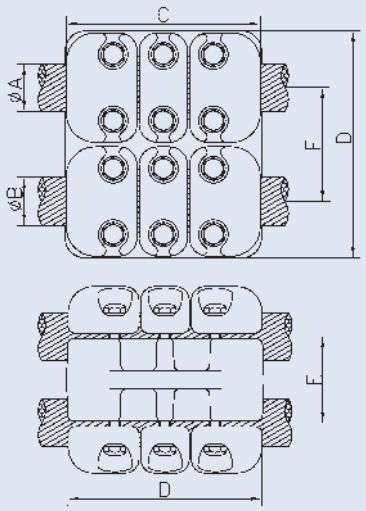

AL-T-Duplex-Connector

Conductor-Conductor

Dim. of Conductor				Code	Technical Data of Connector						
ØA		ØB			Max. Current	Dim. of Connector				Bolt Dim.	
Min.	Max.	Min.	Max.			C	D	E	F	ØA	ØB
24,1	33,0	33,1	42,0	1FB050-027	1700	200	92	90	160	M10	M10
24,1	33,0	42,1	52,0	1FB010-090	1700	80	104	90	150	M10	M10
24,1	33,0	42,1	52,0	1FB022-083	1700	200	96	101	118	M10	M10
33,1	42,0	33,1	42,0	1FB010-108	1400	80	96	87	146	M10	M10
33,1	42,0	33,1	42,0	1FB020-084	1400	90	96	78	133	M10	M10
33,1	42,0	33,1	42,0	1FB022-076	1400	200	96	98	98	M10	M10
33,1	42,0	42,1	52,0	1FB027-060	2000	400	78	86	124	M10	M10
42,1	44,0	24,1	33,0	1FB010-250	1250	100	86	87	160	M10	M10
42,1	44,0	33,1	42,0	1FB020-106	1400	150	118	87	135	M10	M10
42,1	44,0	42,1	52,0	1FB027-063	2000	400	78	86	124	M10	M10
44,1	52,0	24,1	33,0	1FB010-250	1250	100	86	87	160	M10	M10
44,1	52,0	33,1	42,0	1FB020-106	1400	150	118	87	135	M10	M10
52,1	63,0	33,1	42,0	1FB020-115	1400	150	106	96	150	M10	M10

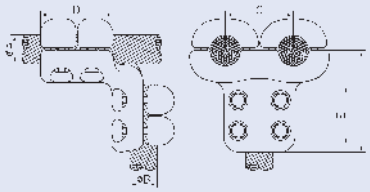

24,1	33,0	33,1	42,0	1FB027-013	1600	300	96	136	136	M10	M10
33,1	42,0	24,1	33,0	1FB010-102	2000	60	96	127	188	M10	M10
33,1	42,0	33,1	42,0	1FB010-111	1600	90	96	127	186	M10	M10
33,1	42,0	33,1	42,0	1FB027-050	2000	300	96	136	136	M10	M10
42,1	52,0	33,1	42,0	1FB020-105	2000	150	118	127	180	M10	M10
42,1	52,0	52,1	63,0	1FB027-097	3200	457	90	160	330	M10	M10
52,1	63,0	42,1	52,0	1FB027-096	2500	457	90	130	146	M10	M10

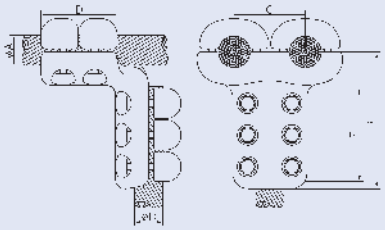

24,1	33,0	33,1	42,0	1FB010-078	1400	50	144	78	153	M10	M10
24,1	33,0	42,1	52,0	1FB050-450	3200	450	144	100	225	M10	M10
24,1	33,0	52,1	63,0	1FB010-093	2200	50	144	90	156	M10	M10
24,1	33,0	52,1	63,0	1FB050-405	2500	400	144	108	200	M10	M10
33,1	42,0	33,1	42,0	1FB020-068	1400	90	136	87	145	M10	M10
33,1	42,0	33,1	42,0	1FB020-070	1400	100	136	87	145	M10	M10
33,1	42,0	52,1	63,0	1FB020-104	2200	90	136	90	151	M10	M10
33,1	42,0	52,1	63,0	1FB050-400	3200	400	136	108	200	M10	M10
42,1	52,0	42,1	52,0	1FB050-050	2500	100	162	90	145	M10	M10
42,1	52,0	52,1	63,0	1FB020-099	2200	100	162	90	158	M10	M10
42,1	52,0	52,1	63,0	1FB050-047	3200	200	142	96	166	M10	M10
42,1	52,0	52,1	63,0	1FB050-457	2500	457	136	91	165	M10	M10
52,1	63,0	52,1	63,0	1FB050-022	4000	200	148	98	193	M10	M10

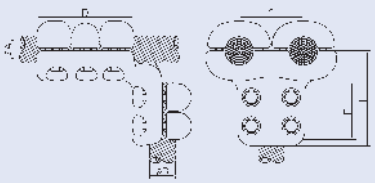

AL-T-Duplex-Connector

Conductor-Conductor

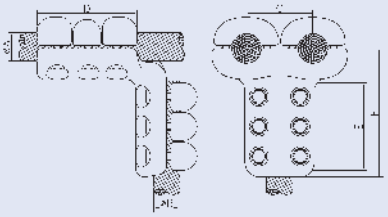

Dim. of Conductor				Code	Technical Data of Connector						
ØA		ØB			Max. Current	Dim. of Connector				Bolt Dim.	
Min.	Max.	Min.	Max.			C	D	E	F	ØA	ØB
24,1	33,0	24,1	33,0	1FB085-019	1600	100	127	144	180	M10	M10
24,1	33,0	24,1	33,0	1FB027-044	1600	400	136	144	144	M10	M10
24,1	33,0	33,1	42,0	1FB080-006	2000	45	144	136	197	M10	M10
24,1	33,0	33,1	42,0	1FB010-060	2000	60	144	118	185	M10	M10
24,1	33,0	33,1	42,0	1FB027-038	2000	300	136	127	130	M10	M10
24,1	33,0	33,1	42,0	1FB027-042	2000	400	136	127	130	M10	M10
24,1	33,0	42,1	44,0	1FB010-063	2000	60	144	127	182	M10	M10
24,1	33,0	42,1	44,0	1FB020-082	2500	100	144	136	200	M10	M10
24,1	33,0	42,1	44,0	1FB027-043	2000	400	136	130	130	M10	M10
24,1	33,0	42,1	44,0	1FB027-087	2500	450	118	136	189	M10	M10
24,1	33,0	44,1	52,0	1FB020-082	2500	100	144	136	200	M10	M10
24,1	33,0	44,1	52,0	1FB027-087	2500	450	118	136	189	M10	M10
24,1	33,0	52,1	63,0	1FB010-096	2500	45	144	136	202	M10	M10
24,1	33,0	52,1	63,0	1FB010-099	2500	50	144	136	202	M10	M10
33,1	42,0	33,1	42,0	1FB010-120	2000	60	138	118	185	M10	M10
33,1	42,0	33,1	42,0	1FB020-093	2000	100	136	127	188	M10	M10
33,1	42,0	33,1	42,0	1FB022-099	2000	200	136	136	136	M10	M10
33,1	42,0	42,1	52,0	1FB020-119	2500	150	136	136	180	M10	M10
33,1	42,0	42,1	52,0	1FB022-123	2000	200	136	144	156	M10	M10
33,1	42,0	42,1	52,0	1FB027-066	2500	400	136	130	130	M10	M10
33,1	42,0	52,1	63,0	1FB010-175	2000	80	136	136	198	M10	M10
33,1	42,0	52,1	63,0	1FB020-098	3200	90	136	136	197	M10	M10
33,1	42,0	52,1	63,0	1FB020-100	3200	100	136	136	195	M10	M10
33,1	42,0	52,1	63,0	1FB022-131	3200	200	118	160	175	M10	M10
33,1	42,0	52,1	63,0	1FB027-074	3200	400	136	136	136	M10	M10
42,1	44,0	33,1	35,1	1FB010-200	2000	70	130	118	181	M10	M10
42,1	44,0	33,1	35,1	1FB010-155	2000	90	131	127	190	M10	M10
42,1	44,0	33,1	35,1	1FB020-092	1600	100	130	127	186	M10	M10
42,1	44,0	35,2	42,0	1FB010-200	2000	70	130	118	181	M10	M10
42,1	44,0	35,2	42,0	1FB010-144	2000	80	130	127	195	M10	M10
42,1	44,0	35,2	42,0	1FB010-155	2000	90	131	127	190	M10	M10
42,1	44,0	35,2	42,0	1FB020-092	1600	100	130	127	186	M10	M10
42,1	44,0	42,1	44,0	1FB010-145	2000	80	130	127	195	M10	M10
42,1	44,0	42,1	44,0	1FB010-156	2000	90	131	127	190	M10	M10
42,1	44,0	52,1	63,0	1FB020-109	3200	100	130	136	195	M10	M10
42,1	44,0	52,1	63,0	1FB020-107	3200	150	162	136	200	M10	M10
44,1	52,0	52,1	63,0	1FB020-107	3200	150	162	136	200	M10	M10

AL-T-Duplex-Connector

Conductor-Conductor

Dim. of Conductor				Code	Technical Data of Connector							
ØA		ØB			Max. Current	Dim. of Connector					Bolt Dim.	
Min.	Max.	Min.	Max.			C	D	E	F	G	ØA	ØB
24,1	31,7	24,1	33,0	1FB215-012	2500	90	90	136	127	217	M10	M10
24,1	31,7	24,1	33,0	1FB210-016	2500	100	100	144	131	231	M10	M10
31,7	33,0	24,1	33,0	1FB215-012	2500	90	90	136	127	217	M10	M10
31,7	33,0	24,1	33,0	1FB210-016	2500	100	100	144	131	231	M10	M10
31,7	33,0	31,7	33,0	1FB210-012	2500	60	60	144	131	228	M10	M10
33,1	42,0	33,1	42,0	1FB210-021	3200	60	60	136	127	230	M10	M10
33,1	42,0	33,1	42,0	1FB210-022	3200	80	80	136	127	237	M10	M10
33,1	42,0	33,1	42,0	1FB215-046	3200	150	150	136	127	231	M10	M10
42,1	44,0	31,7	33,0	1FB210-027	2000	80	80	130	131	242	M10	M10
42,1	44,0	33,1	42,0	1FB210-041	3200	80	80	130	127	257	M10	M10
42,1	44,0	42,1	44,0	1FB210-031	3200	80	80	130	130	256	M10	M10
42,1	44,0	42,1	44,0	1FB215-030	3200	90	90	136	127	240	M10	M10
42,1	44,0	42,1	44,0	1FB215-087	3200	200	200	142	136	240	M10	M10
44,1	52,0	33,1	42,0	1FB210-041	3200	80	80	130	127	257	M10	M10

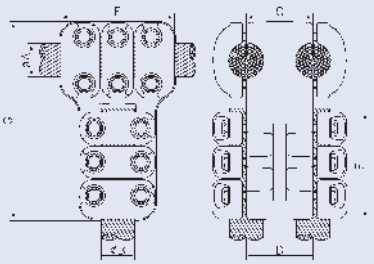

24,1	33,0	24,1	33,0	1FB220-018	2500	200	100	144	131	203	M10	M10
24,1	33,0	24,1	33,0	1FB220-024	3200	400	200	136	144	183	M10	M10
33,1	42,0	33,1	42,0	1FB230-050	3000	200	60	136	127	216	M10	M10
33,1	42,0	33,1	42,0	1FB220-054	3000	200	100	136	127	231	M10	M10
33,1	42,0	33,1	42,0	1FB220-457	3200	457	200	136	136	221	M10	M10
33,1	42,0	33,1	42,0	1FB220-458	3200	457	330	136	136	221	M10	M10
42,1	44,0	42,1	44,0	1FB230-044	3200	200	80	130	130	221	M10	M10

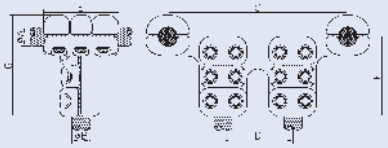

24,1	33,0	24,1	33,0	1FB265-006	2500	200	200	136	131	205	M10	M10
33,1	42,0	33,1	42,0	1FB265-040	3200	100	100	136	127	216	M10	M10
33,1	42,0	33,1	42,0	1FB260-039	3200	200	60	136	138	180	M10	M10
33,1	42,0	33,1	42,0	1FB260-041	3200	200	100	136	136	178	M10	M10
42,1	44,0	42,1	44,0	1FB260-046	3200	90	90	131	131	246	M10	M10
42,1	44,0	42,1	44,0	1FB260-044	3200	200	80	130	130	186	M10	M10

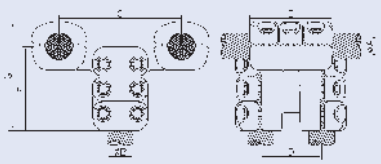

AL-T-Duplex-Connector

Tube-Conductor

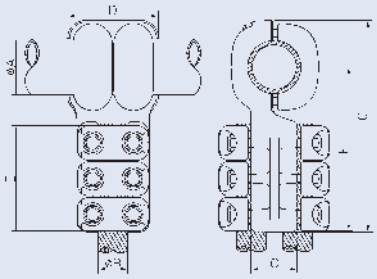

Dim. of Conductor			Code	Technical Data of Connector							
ØA	ØB			Max. Current	Dim. of Connector					Bolt Dim.	
	Min.	Max.			C	D	E	F	G	ØA	ØB
63,0	33,1	42,0	1FB090-056	3000	200	102	136	200	257	M12	M10
63,0	33,1	42,0	1FB090-049	3000	330	102	136	258	315	M12	M10
63,0	42,1	52,0	1FB090-059	3000	150	102	136	212	269	M12	M10
63,0	52,1	63,0	1FB090-050	3000	200	102	136	212	269	M12	M10
80,0	33,1	42,0	1FB090-060	3200	90	98	118	230	301	M12	M10
100,0	33,1	42,0	1FB090-066	3200	90	106	118	230	313	M12	M10
120,0	24,1	33,0	1FB085-314	3200	300	102	144	190	278	M12	M10
120,0	24,1	33,0	1FB085-450	3200	450	102	144	190	278	M12	M10
120,0	33,1	42,0	1FB090-075	3200	90	106	118	233	326	M12	M10
140,0	33,1	42,0	1FB090-087	3200	90	102	118	257	372	M12	M10
140,0	33,1	42,0	1FB090-090	3200	100	102	118	252	367	M12	M10
140,0	42,1	44,0	1FB090-088	3200	90	102	118	257	372	M12	M10
140,0	42,1	44,0	1FB090-104	4500	150	102	118	273	383	M12	M10
140,0	42,1	44,0	1FB090-083	4500	457	102	152	300	405	M12	M10
140,0	44,1	52,0	1FB090-104	4500	150	102	118	273	383	M12	M10
140,0	44,1	52,0	1FB090-083	4500	457	102	152	300	405	M12	M10
140,0	52,1	63,0	1FB090-140	3200	150	102	118	275	380	M12	M10
150,0	33,1	42,0	1FB090-087	3200	90	102	118	257	372	M12	M10
150,0	33,1	42,0	1FB090-090	3200	100	102	118	252	367	M12	M10
150,0	42,1	44,0	1FB090-088	3200	90	102	118	257	372	M12	M10
150,0	42,1	44,0	1FB090-104	4500	150	102	118	273	383	M12	M10
150,0	42,1	44,0	1FB090-083	4500	457	102	152	300	405	M12	M10
150,0	44,1	52,0	1FB090-104	4500	150	102	118	273	383	M12	M10
150,0	44,1	52,0	1FB090-083	4500	457	102	152	300	405	M12	M10
150,0	52,1	63,0	1FB090-140	3200	150	102	118	275	380	M12	M10
160,0	33,1	42,0	1FB090-087	3200	90	102	118	257	372	M12	M10
160,0	33,1	42,0	1FB090-090	3200	100	102	118	252	367	M12	M10
160,0	42,1	44,0	1FB090-088	3200	90	102	118	257	372	M12	M10
160,0	42,1	44,0	1FB090-104	4500	150	102	118	273	383	M12	M10
160,0	42,1	44,0	1FB090-083	4500	457	102	152	300	405	M12	M10
160,0	44,1	52,0	1FB090-104	4500	150	102	118	273	383	M12	M10
160,0	44,1	52,0	1FB090-083	4500	457	102	152	300	405	M12	M10
160,0	52,1	63,0	1FB090-140	3200	150	102	118	275	380	M12	M10
200,0	33,1	42,0	1FB080-200	3200	60	106	127	285	419	M12	M10
200,0	33,1	42,0	1FB090-096	3200	90	102	136	285	415	M12	M10
200,0	42,1	44,0	1FB090-098	3200	100	102	130	280	410	M12	M10
200,0	42,1	44,0	1FB090-180	4500	150	102	118	293	422	M12	M10

AL-T-Duplex-Connector

Tube-Conductor

Dim. of Conductor			Code	Technical Data of Connector							
ØA	ØB			Max. Current	Dim. of Connector					Bolt Dim.	
	Min.	Max.			C	D	E	F	G	ØA	ØB
200,0	44,1	52,0	1FB090-180	4500	150	102	118	293	422	M12	M10
200,0	52,1	63,0	1FB090-200	4000	200	102	118	299	429	M12	M10
250,0	33,1	42,0	1FB090-093	3200	90	102	118	300	457	M12	M10
250,0	33,1	42,0	1FB090-134	2000	150	102	136	300	459	M12	M10
250,0	33,1	42,0	1FB090-138	4000	200	102	127	300	455	M12	M10
250,0	42,1	44,0	1FB090-094	3200	90	102	118	298	457	M12	M10
2“	33,1	42,0	1FB090-056	3000	200	102	136	200	257	M12	M10
2“	33,1	42,0	1FB090-049	3000	330	102	136	258	315	M12	M10
2“	42,1	52,0	1FB090-059	3000	150	102	136	212	269	M12	M10
2“	52,1	63,0	1FB090-050	3000	200	102	136	212	269	M12	M10
2,5“	33,1	42,0	1FB090-060	3200	90	98	118	230	301	M12	M10
3“	52,1	63,0	1FB090-110	3200	150	102	136	260	335	M12	M10
3,5“	33,1	42,0	1FB090-066	3200	90	106	118	230	313	M12	M10
4“	24,1	33,0	1FB085-314	3200	300	102	144	190	278	M12	M10
4“	24,1	33,0	1FB085-450	3200	450	102	144	190	278	M12	M10
4“	33,1	42,0	1FB090-075	3200	90	106	118	233	326	M12	M10
4,5“	24,1	33,0	1FB085-314	3200	300	102	144	190	278	M12	M10
4,5“	24,1	33,0	1FB085-450	3200	450	102	144	190	278	M12	M10
4,5“	33,1	42,0	1FB090-075	3200	90	106	118	233	326	M12	M10
5“	33,1	42,0	1FB090-087	3200	90	102	118	257	372	M12	M10
5“	33,1	42,0	1FB090-090	3200	100	102	118	252	367	M12	M10
5“	42,1	44,0	1FB090-088	3200	90	102	118	257	372	M12	M10
5“	42,1	44,0	1FB090-104	4500	150	102	118	273	383	M12	M10
5“	42,1	44,0	1FB090-083	4500	457	102	152	300	405	M12	M10
5“	44,1	52,0	1FB090-104	4500	150	102	118	273	383	M12	M10
5“	44,1	52,0	1FB090-083	4500	457	102	152	300	405	M12	M10
5“	52,1	63,0	1FB090-140	3200	150	102	118	275	380	M12	M10
8“	33,1	42,0	1FB090-220	3200	200	106	136	291	435	M12	M10
8“	52,1	63,0	1FB090-201	4000	200	102	136	309	449	M12	M10

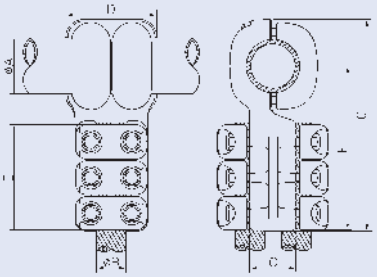

AL-T-Duplex-Connector

Tube-Conductor

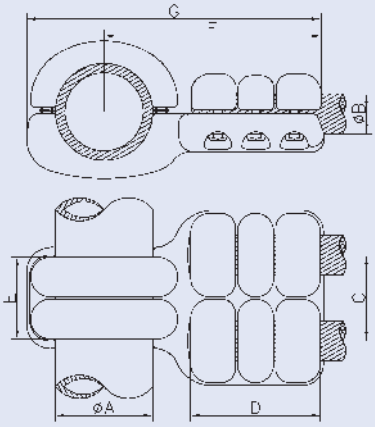

Dim. of Conductor			Code	Technical Data of Connector							
ØA	ØB			Max. Current	Dim. of Connector					Bolt Dim.	
	Min.	Max.			C	D	E	F	G	ØA	ØB
80,0	33,1	42,0	1FB150-009	2200	90	102	118	224	296	M12	M10
80,0	42,1	44,0	1FB150-010	2200	90	102	118	224	296	M12	M10
100,0	33,1	42,0	1FB150-040	3600	90	106	136	230	311	M12	M10
100,0	33,1	42,0	1FB150-025	2600	100	106	118	236	317	M12	M10
100,0	33,1	42,0	1FB150-019	2600	200	106	136	230	311	M12	M10
120,0	33,1	42,0	1FB150-024	3200	90	102	127	235	325	M12	M10
120,0	33,1	42,0	1FB150-023	3000	100	102	136	245	358	M12	M10
140,0	24,1	33,0	1FB150-039	2500	80	102	127	253	368	M12	M10
140,0	33,1	42,0	1FB140-155	3200	60	116	127	260	375	M12	M10
140,0	33,1	42,0	1FB150-042	3200	90	117	118	252	367	M12	M10
140,0	33,1	42,0	1FB150-045	2500	150	102	127	260	375	M12	M10
150,0	24,1	33,0	1FB150-039	2500	80	102	127	253	368	M12	M10
150,0	33,1	42,0	1FB140-155	3200	60	116	127	260	375	M12	M10
150,0	33,1	42,0	1FB150-042	3200	90	117	118	252	367	M12	M10
150,0	33,1	42,0	1FB150-045	2500	150	102	127	260	375	M12	M10
160,0	24,1	33,0	1FB150-039	2500	80	102	127	253	368	M12	M10
160,0	33,1	42,0	1FB140-155	3200	60	116	127	260	375	M12	M10
160,0	33,1	42,0	1FB150-042	3200	90	117	118	252	367	M12	M10
160,0	33,1	42,0	1FB150-045	2500	150	102	127	260	375	M12	M10
200,0	33,1	42,0	1FB150-054	3200	90	106	136	290	424	M12	M10
200,0	33,1	42,0	1FB150-053	4000	200	106	127	275	409	M12	M10
200,0	42,1	52,0	1FB150-150	4000	150	106	146	281	415	M12	M10
250,0	33,1	42,0	1FB150-057	3200	90	102	127	301	460	M12	M10
2,5“	33,1	42,0	1FB150-009	2200	90	102	118	224	296	M12	M10
2,5“	42,1	44,0	1FB150-010	2200	90	102	118	224	296	M12	M10
3,5“	33,1	42,0	1FB150-040	3600	90	106	136	230	311	M12	M10
3,5“	33,1	42,0	1FB150-025	2600	100	106	118	236	317	M12	M10
3,5“	33,1	42,0	1FB150-019	2600	200	106	136	230	311	M12	M10
4“	33,1	42,0	1FB150-024	3200	90	102	127	235	325	M12	M10
4“	33,1	42,0	1FB150-023	3000	100	102	136	245	358	M12	M10
4,5“	33,1	42,0	1FB150-024	3200	90	102	127	235	325	M12	M10
4,5“	33,1	42,0	1FB150-023	3000	100	102	136	245	358	M12	M10
5“	24,1	33,0	1FB150-039	2500	80	102	127	253	368	M12	M10
5“	33,1	42,0	1FB140-155	3200	60	116	127	260	375	M12	M10
5“	33,1	42,0	1FB150-042	3200	90	117	118	252	367	M12	M10
5“	33,1	42,0	1FB150-045	2500	150	102	127	260	375	M12	M10
6“	42,1	44,0	1FB150-457	4000	457	102	136	258	375	M12	M10

AL-T-Duplex-Connector

Tube-Conductor

Dim. of Conductor			Code	Technical Data of Connector							
ØA	ØB			Max. Current	Dim. of Connector					Bolt Dim.	
	Min.	Max.			C	D	E	F	G	ØA	ØB
120,0	33,1	42,0	1FB460-050	4000	100	102	118	235	325	M12	M10
200,0	33,1	42,0	1FB460-048	4000	90	102	118	274	411	M12	M10
4“	33,1	42,0	1FB460-050	4000	100	102	118	235	325	M12	M10
4,5“	33,1	42,0	1FB460-050	4000	100	102	118	235	325	M12	M10
6“	33,1	42,0	1FB460-170	4600	100	144	186	325	446	M12	M10

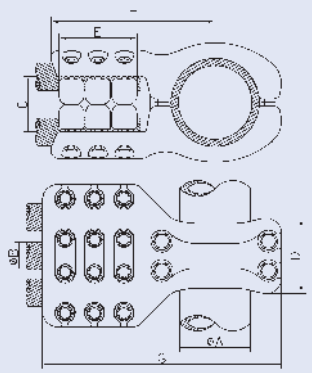

140,0	33,1	42,0	1FB472-160	4000	100	102	118	250	362	M12	M10
140,0	42,1	44,0	1FB472-161	4000	100	102	136	250	362	M12	M10
150,0	33,1	42,0	1FB472-160	4000	100	102	118	250	362	M12	M10
150,0	42,1	44,0	1FB472-161	4000	100	102	136	250	362	M12	M10
160,0	33,1	42,0	1FB472-160	4000	100	102	118	250	362	M12	M10
160,0	42,1	44,0	1FB472-161	4000	100	102	136	250	362	M12	M10
5“	33,1	42,0	1FB472-160	4000	100	102	118	250	362	M12	M10
5“	42,1	44,0	1FB472-161	4000	100	102	136	250	362	M12	M10

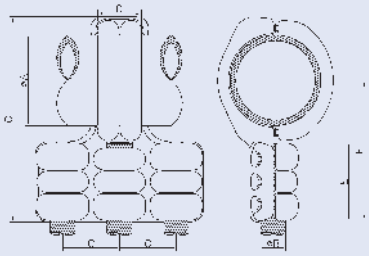

AL-T-Duplex-Terminal

Conductor-Stud

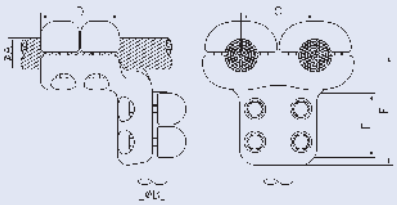

Dim. of Conductor			Code	Technical Data of Connector						
ØA		ØB		Max. Current	Dim. of Connector				Bolt Dim.	
Min.	Max.				C	D	E	F	ØA	ØB
24,1	33,0	30,0	1FB050-027	1700	200	92	90	160	M10	M10
24,1	33,0	40,0	1FB050-027	1700	200	92	90	160	M10	M10
24,1	33,0	40,0	1FB010-090	1700	80	104	99	150	M10	M10
24,1	33,0	40,0	1FB022-083	1700	200	96	101	118	M10	M10
24,1	33,0	50,0	1FB010-090	1700	80	104	99	150	M10	M10
24,1	33,0	50,0	1FB022-083	1700	200	96	101	118	M10	M10
33,1	42,0	30,0	1FB010-108	1400	80	96	87	146	M10	M10
33,1	42,0	30,0	1FB020-084	1400	90	96	90	133	M10	M10
33,1	42,0	30,0	1FB022-076	1400	200	96	98	98	M10	M10
33,1	42,0	40,0	1FB010-108	1400	80	96	87	146	M10	M10
33,1	42,0	40,0	1FB020-084	1400	90	96	90	133	M10	M10
33,1	42,0	40,0	1FB022-076	1400	200	96	98	98	M10	M10
33,1	42,0	40,0	1FB027-060	2000	400	78	86	124	M10	M10
33,1	42,0	50,0	1FB027-060	2000	400	78	86	124	M10	M10
42,1	44,0	30,0	1FB010-250	1250	100	86	87	160	M10	M10
42,1	44,0	40,0	1FB020-106	1400	150	118	90	135	M10	M10
42,1	44,0	40,0	1FB027-063	2000	400	78	86	124	M10	M10
42,1	44,0	50,0	1FB027-063	2000	400	78	86	124	M10	M10
44,1	52,0	30,0	1FB010-250	1250	100	86	87	160	M10	M10
44,1	52,0	30,0	1FB020-106	1400	150	118	90	135	M10	M10
44,1	52,0	40,0	1FB020-106	1400	150	118	90	135	M10	M10
52,1	63,0	30,0	1FB020-115	1400	150	106	99	150	M10	M10
52,1	63,0	40,0	1FB020-115	1400	150	106	99	150	M10	M10

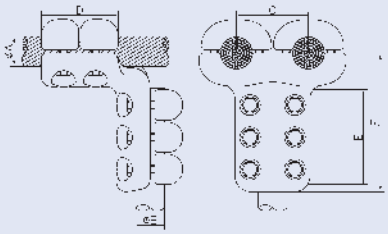

24,1	33,0	30,0	1FB027-013	1600	300	96	136	136	M10	M10
24,1	33,0	40,0	1FB027-013	1600	300	96	136	136	M10	M10
33,1	42,0	30,0	1FB010-102	2000	60	96	127	188	M10	M10
33,1	42,0	30,0	1FB010-111	1600	90	96	127	186	M10	M10
33,1	42,0	30,0	1FB027-050	2000	300	96	136	136	M10	M10
33,1	42,0	40,0	1FB010-111	1600	90	96	127	186	M10	M10
33,1	42,0	40,0	1FB027-050	2000	300	96	136	136	M10	M10
42,1	52,0	30,0	1FB020-105	2000	150	118	130	180	M10	M10
42,1	52,0	40,0	1FB020-105	2000	150	118	130	180	M10	M10
42,1	52,0	50,0	1FB027-097	3200	457	90	160	330	M10	M10
42,1	52,0	60,0	1FB027-097	3200	457	90	160	330	M10	M10
52,1	63,0	40,0	1FB027-096	2500	457	90	130	146	M10	M10
52,1	63,0	50,0	1FB027-096	2500	457	90	130	146	M10	M10

AL-T-Duplex-Terminal

Conductor-Stud

Dim. of Conductor			Code	Technical Data of Connector						
ØA		ØB		Max. Current	Dim. of Connector				Bolt Dim.	
Min.	Max.				C	D	E	F	ØA	ØB
24,1	33,0	30,0	1FB010-078	1400	50	144	90	153	M10	M10
24,1	33,0	40,0	1FB010-078	1400	50	144	90	153	M10	M10
24,1	33,0	40,0	1FB050-450	3200	450	144	100	225	M10	M10
24,1	33,0	50,0	1FB010-093	2200	50	144	96	156	M10	M10
24,1	33,0	50,0	1FB050-450	3200	450	144	100	225	M10	M10
24,1	33,0	50,0	1FB010-093	2200	50	144	96	156	M10	M10
24,1	33,0	50,0	1FB050-405	2500	400	144	108	200	M10	M10
24,1	33,0	60,0	1FB010-093	2200	50	144	96	156	M10	M10
24,1	33,0	60,0	1FB050-405	2500	400	144	108	200	M10	M10
33,1	42,0	30,0	1FB020-068	1400	90	136	90	145	M10	M10
33,1	42,0	30,0	1FB020-070	1400	100	136	90	145	M10	M10
33,1	42,0	40,0	1FB020-068	1400	90	136	90	145	M10	M10
33,1	42,0	40,0	1FB020-070	1400	100	136	90	145	M10	M10
33,1	42,0	50,0	1FB020-104	2200	90	136	99	151	M10	M10
33,1	42,0	50,0	1FB050-400	3200	400	136	108	200	M10	M10
33,1	42,0	60,0	1FB020-104	2200	90	136	99	151	M10	M10
33,1	42,0	60,0	1FB050-400	3200	400	136	108	200	M10	M10
42,1	52,0	40,0	1FB050-050	2500	100	162	90	145	M10	M10
42,1	52,0	50,0	1FB050-050	2500	100	162	90	145	M10	M10
42,1	52,0	50,0	1FB020-099	2200	100	162	99	158	M10	M10
42,1	52,0	50,0	1FB050-047	3200	200	142	96	166	M10	M10
42,1	52,0	50,0	1FB050-457	2500	457	136	91	165	M10	M10
42,1	52,0	60,0	1FB020-099	2200	100	162	99	158	M10	M10
42,1	52,0	60,0	1FB050-047	3200	200	142	96	166	M10	M10
42,1	52,0	60,0	1FB050-457	2500	457	136	91	165	M10	M10
52,1	63,0	50,0	1FB050-022	4000	200	148	98	193	M10	M10
52,1	63,0	60,0	1FB050-022	4000	200	148	98	193	M10	M10

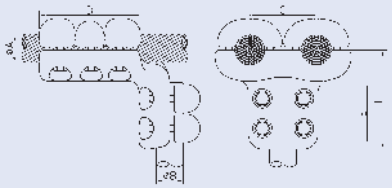

AL-T-Duplex-Terminal

Conductor-Stud

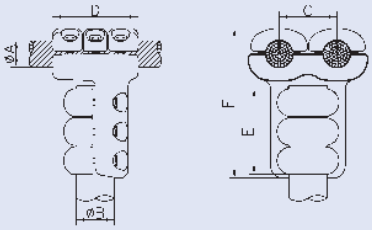

Dim. of Conductor			Code	Technical Data of Connector						
ØA		ØB		Max. Current	Dim. of Connector				Bolt Dim.	
Min.	Max.				C	D	E	F	ØA	ØB
24,1	33,0	30,0	1FB085-019	1600	100	127	144	180	M10	M10
24,1	33,0	30,0	1FB027-044	1600	400	136	144	144	M10	M10
24,1	33,0	30,0	1FB080-006	2000	45	144	136	197	M10	M10
24,1	33,0	30,0	1FB010-060	2000	60	144	130	185	M10	M10
24,1	33,0	30,0	1FB027-038	2000	300	136	127	130	M10	M10
24,1	33,0	30,0	1FB027-042	2000	400	136	127	130	M10	M10
24,1	33,0	40,0	1FB080-006	2000	45	144	136	197	M10	M10
24,1	33,0	40,0	1FB010-060	2000	60	144	130	185	M10	M10
24,1	33,0	40,0	1FB020-082	2500	100	144	145	200	M10	M10
24,1	33,0	40,0	1FB027-038	2000	300	136	127	130	M10	M10
24,1	33,0	40,0	1FB027-042	2000	400	136	127	130	M10	M10
24,1	33,0	40,0	1FB027-087	2500	450	118	145	189	M10	M10
24,1	33,0	50,0	1FB010-096	2500	45	144	142	202	M10	M10
24,1	33,0	50,0	1FB010-099	2500	50	144	142	202	M10	M10
24,1	33,0	50,0	1FB020-082	2500	100	144	145	200	M10	M10
24,1	33,0	50,0	1FB027-087	2500	450	118	145	189	M10	M10
24,1	33,0	60,0	1FB010-096	2500	45	144	142	202	M10	M10
24,1	33,0	60,0	1FB010-099	2500	50	144	142	202	M10	M10
33,1	42,0	30,0	1FB010-120	2000	60	138	127	185	M10	M10
33,1	42,0	30,0	1FB020-093	2000	100	136	130	188	M10	M10
33,1	42,0	30,0	1FB022-099	2000	200	136	136	136	M10	M10
33,1	42,0	40,0	1FB010-120	2000	60	138	127	185	M10	M10
33,1	42,0	40,0	1FB020-093	2000	100	136	130	188	M10	M10
33,1	42,0	40,0	1FB020-119	2500	150	136	145	180	M10	M10
33,1	42,0	40,0	1FB022-099	2000	200	136	136	136	M10	M10
33,1	42,0	40,0	1FB022-123	2000	200	136	144	156	M10	M10
33,1	42,0	50,0	1FB010-175	2000	80	136	145	198	M10	M10
33,1	42,0	50,0	1FB020-098	3200	90	136	145	197	M10	M10
33,1	42,0	50,0	1FB020-100	3200	100	136	145	195	M10	M10
33,1	42,0	50,0	1FB020-119	2500	150	136	145	180	M10	M10
33,1	42,0	50,0	1FB022-123	2000	200	136	144	156	M10	M10
33,1	42,0	50,0	1FB027-066	2500	400	136	130	130	M10	M10
33,1	42,0	60,0	1FB010-175	2000	80	136	145	198	M10	M10
33,1	42,0	60,0	1FB020-098	3200	90	136	145	197	M10	M10
33,1	42,0	60,0	1FB020-100	3200	100	136	145	195	M10	M10
33,1	42,0	60,0	1FB022-131	3200	200	118	160	175	M10	M10
33,1	42,0	60,0	1FB027-074	3200	400	136	136	136	M10	M10

AL-Straight-Connector

Conductor-Conductor

Dim. of Conductor			Code	Technical Data of Connector						
ØA		ØB		Max. Current	Dim. of Connector				Bolt Dim.	
Min.	Max.				C	D	E	F	ØA	ØB
42,1	44,0	30,0	1FB010-200	2000	70	130	127	181	M10	M10
42,1	44,0	30,0	1FB010-155	2000	90	131	130	190	M10	M10
42,1	44,0	30,0	1FB020-092	1600	100	130	127	186	M10	M10
42,1	44,0	40,0	1FB010-200	2000	70	130	127	181	M10	M10
42,1	44,0	40,0	1FB010-144	2000	80	130	127	195	M10	M10
42,1	44,0	40,0	1FB010-155	2000	90	131	130	190	M10	M10
42,1	44,0	40,0	1FB020-092	1600	100	130	127	186	M10	M10
42,1	44,0	50,0	1FB020-109	3200	100	130	145	195	M10	M10
42,1	44,0	50,0	1FB020-107	3200	150	162	145	200	M10	M10
42,1	44,0	60,0	1FB020-109	3200	100	130	145	195	M10	M10
42,1	44,0	60,0	1FB020-107	3200	150	162	145	200	M10	M10
44,1	52,0	50,0	1FB020-107	3200	150	162	145	200	M10	M10
44,1	52,0	60,0	1FB020-107	3200	150	162	145	200	M10	M10

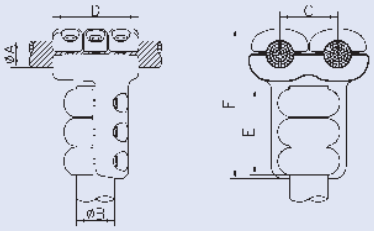

AL-T-Duplex-Terminal

Stud-Conductor

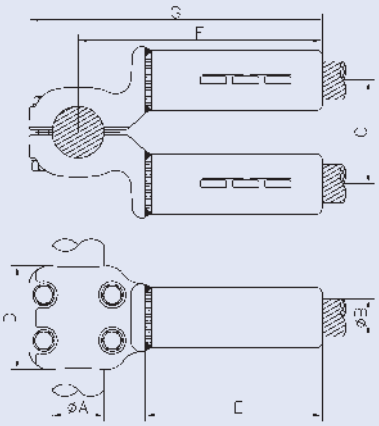

Dim. of Cond.			Code	Technical Data of Connector							
ØA	ØB			Max. Current	Dim. Connector					Bolt Dim. ØA	Inst. Die No.
	Min.	Max.			C	D	E	F	G		
40,0	27,5	28,4	1FB101-002	1900	200	100	105	120	164	M10	KZ 42
50,0	26,1	26,9	1FB100-008	1800	100	102	105	182	239	M10	KZ 42
50,0	27,5	28,4	1FB100-016	1900	100	102	105	182	239	M10	KZ 42
50,0	27,5	28,4	1FB101-002	1900	200	100	105	120	164	M10	KZ 42
50,0	30,0	30,9	1FB100-018	2400	100	90	160	237	294	M10	KZ 52
50,0	31,7	32,4	1FB100-009	2500	85	96	160	233	292	M10	KZ 52
50,0	31,7	32,4	1FB100-013	3000	100	102	160	237	294	M10	KZ 52
50,0	36,1	37,1	1FB100-011	2700	200	102	170	248	305	M10	KZ 58
50,0	39,3	40,5	1FB100-012	3200	85	96	170	263	302	M10	KZ 62
50,0	39,3	40,5	1FB100-014	2800	200	102	170	248	305	M10	KZ 62
60,0	26,1	26,9	1FB100-008	1800	100	102	105	182	239	M10	KZ 42
60,0	27,5	28,4	1FB100-016	1900	100	102	105	182	239	M10	KZ 42
60,0	30,0	30,9	1FB100-018	2400	100	90	160	237	294	M10	KZ 52
60,0	31,7	32,4	1FB100-009	2500	85	96	160	233	292	M10	KZ 52
60,0	31,7	32,4	1FB100-013	3000	100	102	160	237	294	M10	KZ 52
60,0	36,1	37,1	1FB100-011	2700	200	102	170	248	305	M10	KZ 58
60,0	39,3	40,5	1FB100-012	3200	85	96	170	263	302	M10	KZ 62
60,0	39,3	40,5	1FB100-014	2800	200	102	170	248	305	M10	KZ 62

AL-T-Duplex-Flat Terminal

Conductor-Flat Terminal

Dim. of Conductor				Code	Technical Data of Connector						
ØA		C	D		Max. Current	Dim. of Connector					Bolt Dim.ØA
Min.	Max.					E	F	G	H	L	
24,1	33,0	100	100	1GB110-207	2500	25	60	144	159	203	M10
24,1	33,0	100	100	1GB121-022	2500	25	100	144	144	183	M10
33,1	42,0	75	75	1GB110-010	1800	25	80	136	134	180	M10
33,1	42,0	80	80	1GB110-212	2000	25	90	136	139	185	M10
33,1	42,0	100	100	1GB110-080	2500	25	90	138	159	205	M10
33,1	42,0	100	100	1GB121-031	2500	30	200	136	145	187	M10
33,1	42,0	125	125	1GB121-052	4000	30	200	136	170	212	M10
33,1	42,0	200	100	1GB110-081	3200	25	100	136	158	205	M10
42,1	44,0	75	75	1GB110-240	2000	30	100	130	135	185	M10
42,1	44,0	80	80	1GB121-038	2500	30	150	162	135	182	M10
42,1	44,0	100	100	1GB110-082	2500	25	90	130	160	210	M10
42,1	44,0	100	100	1GB121-041	3200	30	150	162	155	205	M10
42,1	44,0	100	100	1GB121-044	2500	25	457	136	160	205	M10
42,1	44,0	125	125	1GB121-039	3200	30	150	162	180	227	M10
42,1	44,0	125	125	1GB121-037	3200	30	200	162	180	230	M10
42,1	44,0	125	125	1GB121-040	3200	25	400	136	180	225	M10
42,1	44,0	200	100	1GB121-042	3200	30	150	162	155	202	M10
44,1	52,0	80	80	1GB121-038	2500	30	150	162	135	182	M10
44,1	52,0	100	100	1GB110-255	2000	25	90	130	170	227	M10
44,1	52,0	100	100	1GB121-041	3200	30	150	162	155	205	M10
44,1	52,0	100	100	1GB121-044	2500	25	457	136	160	205	M10
44,1	52,0	125	125	1GB121-039	3200	30	150	162	180	227	M10
44,1	52,0	125	125	1GB121-037	3200	30	200	162	180	230	M10
44,1	52,0	125	125	1GB121-040	3200	25	400	136	180	225	M10
44,1	52,0	200	100	1GB121-042	3200	30	150	162	155	202	M10

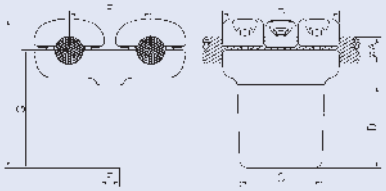

33,1	42,0	100	100	1GB030-050	2500	30	100	60	136	307	M10
33,1	42,0	100	100	1GB030-055	2500	30	200	60	136	407	M10
33,1	42,0	200	100	1GB030-053	3150	30	100	75	176	313	M10
42,1	44,0	200	100	1GB030-054	3150	30	100	75	176	313	M10
42,1	44,0	200	100	1GB030-070	2500	30	150	75	136	365	M10
44,1	52,0	200	100	1GB030-070	2500	30	150	75	136	365	M10

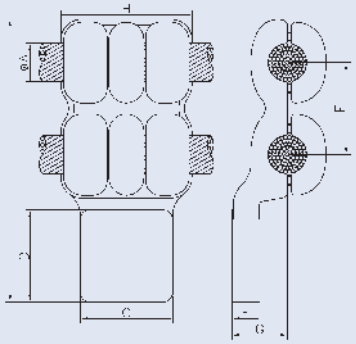

AL-T-Triplex-Connector

Conductor-Conductor

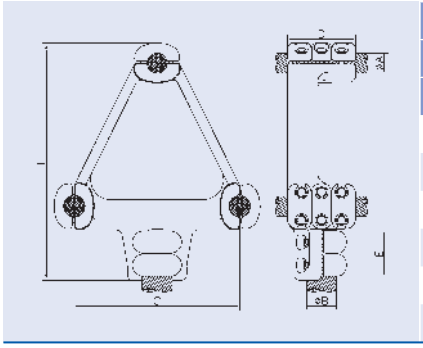

Dim. of Conductor				Code	Technical Data of Connector						
ØA		ØB			Max. Current	Dim. of Connector				Bolt Dim.	
Min.	Max.	Min.	Max.			C	D	E	F	ØA	ØB
33,1	42,0	33,1	42,0	1FB411-332	2200	330	136	90	474	3/M10	2/M10
33,1	42,0	52,1	63,0	1FB411-202	2000	200	96	90	368	3/M10	2/M10
33,1	42,0	52,1	63,0	1FB411-331	2200	300	136	90	449	3/M10	2/M10
33,1	42,0	52,1	63,0	1FB411-334	3200	330	136	136	522	3/M10	3/M10

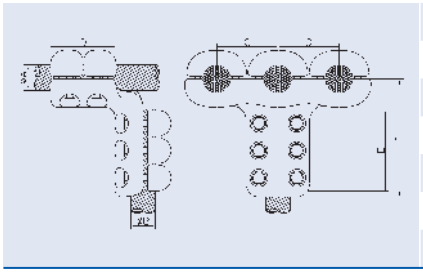

24,1	33,0	33,1	42,0	1FB420-032	1400	100	96	96	162	2/M10	2/M10
33,1	42,0	33,1	42,0	1FB420-033	2000	100	96	136	208	2/M10	3/M10
33,1	42,0	42,1	52,0	1FB420-018	2500	200	78	130	211	2/M10	3/M10
33,1	42,0	42,1	52,0	1FB420-017	3200	200	127	131	212	3/M10	3/M10
33,1	42,0	52,1	63,0	1FB420-006	3200	90	136	152	234	3/M10	3/M10
33,1	42,0	52,1	63,0	1FB420-007	3200	100	142	152	234	3/M10	3/M10

AL-T-Triplex-Connector

Conductor-Conductor

Dim. of Conductor				Code	Technical Data of Connector								
ØA		ØB			Max. Current	Dim. of Connector					Bolt Dim.	
Min.	Max.	Min.	Max.			C	D	E	F	G	ØA	ØB
24,1	33,0	33,1	42,0	1FB570-300	3200	300	300	144	136	338	3/M10	3/M10
24,1	33,0	33,1	42,0	1FB570-405	3200	400	200	144	136	424	3/M10	3/M10
33,1	42,0	52,1	63,0	1FB570-350	3200	350	200	136	136	384	3/M10	3/M10

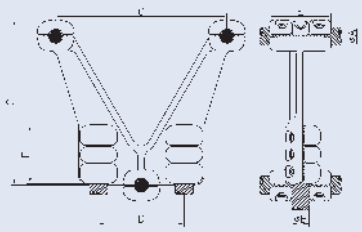

AL-T-Triplex-Terminal

Conductor-Stud

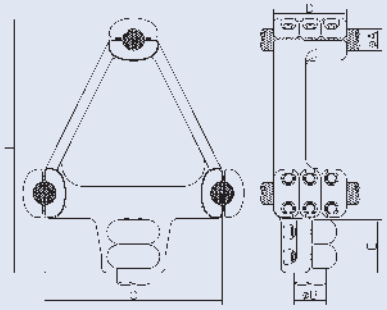

Dim. of Conductor			Code	Technical Data of Connector						
ØA		ØB		Max. Current	Dim. of Connector				Bolt Dim.	
Min.	Max.				C	D	E	F	ØA	ØB
33,1	42,0	30,0	1FB411-332	2200	330	136	102	474	3/M10	2/M10
33,1	42,0	40,0	1FB411-332	2200	330	136	102	474	3/M10	2/M10
33,1	42,0	50,0	1FB411-202	2000	200	96	99	368	3/M10	2/M10
33,1	42,0	50,0	1FB411-331	2200	300	136	99	449	3/M10	2/M10
33,1	42,0	50,0	1FB411-334	3200	330	136	145	522	3/M10	3/M10
33,1	42,0	60,0	1FB411-202	2000	200	96	99	368	3/M10	2/M10
33,1	42,0	60,0	1FB411-331	2200	300	136	99	449	3/M10	2/M10
33,1	42,0	60,0	1FB411-334	3200	330	136	145	522	3/M10	3/M10

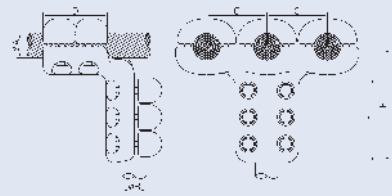

24,1	33,0	30,0	1FB420-032	1400	100	96	96	162	2/M10	2/M10
24,1	33,0	40,0	1FB420-032	1400	100	96	96	162	2/M10	2/M10
33,1	42,0	30,0	1FB420-033	2000	100	96	136	208	2/M10	3/M10
33,1	42,0	40,0	1FB420-033	2000	100	96	136	208	2/M10	3/M10
33,1	42,0	40,0	1FB420-022	2500	200	96	96	146	2/M10	2/M10
33,1	42,0	40,0	1FB420-018	2500	200	78	130	211	2/M10	3/M10
33,1	42,0	40,0	1FB420-017	3200	200	127	131	212	3/M10	3/M10
33,1	42,0	50,0	1FB420-006	3200	90	136	152	234	3/M10	3/M10
33,1	42,0	50,0	1FB420-007	3200	100	142	152	234	3/M10	3/M10
33,1	42,0	50,0	1FB420-022	2500	200	96	96	146	2/M10	2/M10
33,1	42,0	50,0	1FB420-018	2500	200	78	130	211	2/M10	3/M10
33,1	42,0	50,0	1FB420-017	3200	200	127	131	212	3/M10	3/M10
33,1	42,0	60,0	1FB420-006	3200	90	136	152	234	3/M10	3/M10
33,1	42,0	60,0	1FB420-007	3200	100	142	152	234	3/M10	3/M10

AL-T-Quadruple-Connector

Conductor-Conductor

Dim. of Conductor				Code	Technical Data of Connector						
ØA		ØB			Max. Current	Dim. of Connector				Bolt Dim.	
Min.	Max.	Min.	Max.			C	D	E	F	ØA	ØB
24,1	33,0	33,1	42,0	1FB615-551	2000	100	104	90	288	2/M10	2/M10
24,1	33,0	33,1	42,0	1FB615-552	3000	200	96	91	385	2/M10	2/M12
24,1	33,0	42,1	52,0	1FB630-010	2500	400	104	130	491	2/M10	3/M10
24,1	33,0	42,1	52,0	1FB615-554	2850	150	108	151	390	2/M10	3/M10
24,1	33,0	52,1	63,0	1FB615-550	4000	90	144	151	320	3/M10	3/M12
24,1	33,0	52,1	63,0	1FB615-553	3000	200	96	91	385	2/M10	3/M12
24,1	33,0	52,1	63,0	1FB635-401	2200	400	144	160	491	3/M10	3/M10
33,1	42,0	33,1	42,0	1FB615-040	2000	80	184	88	295	2/M10	3/M10
33,1	42,0	33,1	42,0	1FB610-010	1400	90	96	78	282	2/M10	2/M10
33,1	42,0	42,1	52,0	1FB610-100	3000	90	140	118	323	3/M10	3/M10
42,1	44,0	42,1	52,0	1FB610-105	3000	90	140	118	323	3/M10	3/M10

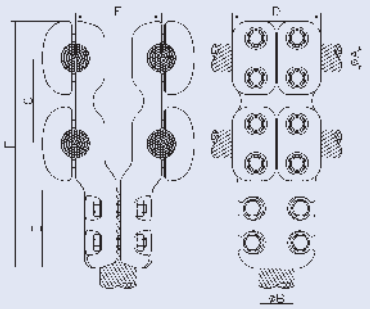

AL-T-Quadruple-Connector

Conductor-Conductor

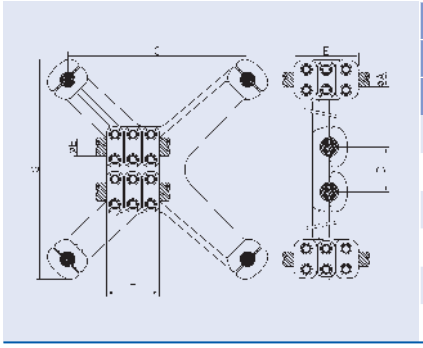

Dim. of Conductor				Code	Technical Data of Connector							
ØA		ØB			Max. Current	Dim. of Connector					Caps/Bolt Dim.	
Min.	Max.	Min.	Max.			C	D	E	F	G	ØA	ØB
24,1	33,0	24,1	33,0	1FB755-010	3200	90	90	96	87	290	2/M10	2/M10
24,1	33,0	24,1	33,0	1FB755-020	4000	100	100	144	131	337	3/M10	3/M10
24,1	33,0	33,1	42,0	1FB728-400	3200	400	100	144	118	491	3/M10	3/M10
24,1	33,0	33,1	42,0	1FB728-401	4000	400	200	144	118	491	3/M10	3/M10
24,1	33,0	42,1	44,0	1FB728-405	3200	400	100	144	130	491	3/M10	3/M10
24,1	33,0	52,1	63,0	1FB728-450	3200	450	200	104	160	541	2/M10	3/M10

AL-T-Quarduple-Connector

Tube-Conductor

Dim. of Cond.			Code	Technical Data of Connector							
ØA	ØB			Max. Current	Dim. of Connector					Caps/Bolt Dim.	
	Min.	Max.			C	D	E	F	G	ØA	ØB
63,0	33,1	42,0	1FB660-040	3200	90	148	78	165	225	3/M12	2/M10
80,0	33,1	42,0	1FB660-080	3200	90	102	118	224	296	2/M12	3/M10
80,0	42,1	44,0	1FB660-085	3200	90	102	118	224	296	2/M12	3/M10
100,0	24,1	33,0	1FB660-091	3200	200	102	145	215	295	2/M12	2/M10
120,0	33,1	42,0	1FB660-120	4000	90	102	118	235	325	2/M12	3/M10
140,0	24,1	33,0	1FB660-203	2850	150	102	145	255	365	2/M12	2/M10
140,0	33,1	42,0	1FB660-170	5000	90	102	136	255	365	2/M12	3/M10
140,0	33,1	42,0	1FB660-161	6000	200	142	136	180	290	3/M12	3/M10
140,0	42,1	52,0	1FB660-180	5000	150	102	162	275	385	2/M12	3/M10
150,0	24,1	33,0	1FB660-203	2850	150	102	145	255	365	2/M12	2/M10
150,0	33,1	42,0	1FB660-170	5000	90	102	136	255	365	2/M12	3/M10
150,0	33,1	42,0	1FB660-161	6000	200	142	136	180	290	3/M12	3/M10
150,0	42,1	52,0	1FB660-180	5000	150	102	162	275	385	2/M12	3/M10
160,0	24,1	33,0	1FB660-203	2850	150	102	145	255	365	2/M12	2/M10
160,0	33,1	42,0	1FB660-170	5000	90	102	136	255	365	2/M12	3/M10
160,0	33,1	42,0	1FB660-161	6000	200	142	136	180	290	3/M12	3/M10
160,0	42,1	52,0	1FB660-180	5000	150	102	162	275	385	2/M12	3/M10
200,0	24,1	33,0	1FB660-210	3200	90	102	78	233	363	2/M12	2/M10
200,0	24,1	33,0	1FB660-202	3200	200	102	145	215	345	2/M12	2/M10
200,0	33,1	42,0	1FB660-351	4000	80	102	133	280	420	2/M12	2/M10
200,0	33,1	42,0	1FB660-216	5000	100	102	118	278	408	2/M12	3/M10
200,0	42,1	52,0	1FB660-380	5000	150	102	162	300	430	2/M12	3/M10
250,0	24,1	33,0	1FB660-251	3200	80	102	78	277	436	2/M12	2/M10
250,0	24,1	33,0	1FB660-252	5000	100	110	118	301	460	2/M12	3/M10
2“	33,1	42,0	1FB660-040	3200	90	148	78	165	225	3/M12	2/M10
2,5“	33,1	42,0	1FB660-080	3200	90	102	118	224	296	2/M12	3/M10
2,5“	42,1	44,0	1FB660-085	3200	90	102	118	224	296	2/M12	3/M10
3,5“	24,1	33,0	1FB660-091	3200	200	102	145	215	295	2/M12	2/M10
4“	33,1	42,0	1FB660-120	4000	90	102	118	235	325	2/M12	3/M10
4,5“	33,1	42,0	1FB660-120	4000	90	102	118	235	325	2/M12	3/M10
5“	24,1	33,0	1FB660-203	2850	150	102	145	255	365	2/M12	2/M10
5“	33,1	42,0	1FB660-170	5000	90	102	136	255	365	2/M12	3/M10
5“	33,1	42,0	1FB660-161	6000	200	142	136	180	290	3/M12	3/M10
5“	42,1	52,0	1FB660-180	5000	150	102	162	275	385	2/M12	3/M10
8“	24,1	33,0	1FB660-220	4000	80	106	118	283	427	2/M12	3/M10

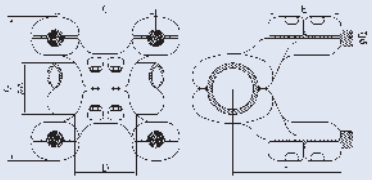

AL-T-Quadruple-Terminal

Conductor-Stud

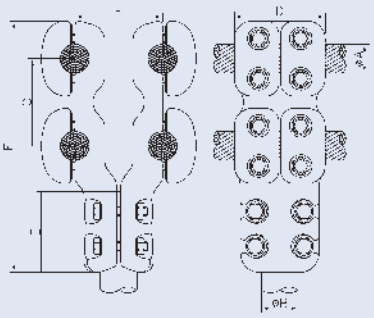

Dim. of Conductor			Code	Technical Data of Connector						
ØA		ØB		Max. Current	Dim. of Connector				Capst/Bolt Dim.	
Min.	Max.				C	D	E	F	ØA	ØB
24,1	33,0	30,0	1FB615-551	2000	100	104	90	288	2/M10	2/M10
24,1	33,0	30,0	1FB615-552	3000	200	96	91	385	2/M10	2/M12
24,1	33,0	40,0	1FB615-551	2000	100	104	90	288	2/M10	2/M10
24,1	33,0	40,0	1FB615-554	2850	150	108	151	390	2/M10	3/M10
24,1	33,0	40,0	1FB615-552	3000	200	96	91	385	2/M10	2/M12
24,1	33,0	50,0	1FB615-554	2850	150	108	151	390	2/M10	3/M10
24,1	33,0	50,0	1FB615-550	4000	90	144	151	320	3/M10	3/M12
24,1	33,0	50,0	1FB615-553	3000	200	96	91	385	2/M10	3/M12
24,1	33,0	50,0	1FB635-401	2200	400	144	160	491	3/M10	3/M10
24,1	33,0	60,0	1FB615-550	4000	90	144	151	320	3/M10	3/M12
24,1	33,0	60,0	1FB615-553	3000	200	96	91	385	2/M10	3/M12
24,1	33,0	60,0	1FB635-401	2200	400	144	160	491	3/M10	3/M10
33,1	42,0	30,0	1FB615-040	2000	80	184	88	295	2/M10	3/M10
33,1	42,0	30,0	1FB610-010	1400	90	96	78	282	2/M10	2/M10
33,1	42,0	40,0	1FB615-040	2000	80	184	88	295	2/M10	3/M10
33,1	42,0	40,0	1FB610-010	1400	90	96	78	282	2/M10	2/M10
33,1	42,0	40,0	1FB610-100	3000	90	140	118	323	3/M10	3/M10
33,1	42,0	50,0	1FB610-100	3000	90	140	118	323	3/M10	3/M10
42,1	44,0	40,0	1FB610-105	3000	90	140	118	323	3/M10	3/M10
42,1	44,0	50,0	1FB610-105	3000	90	140	118	323	3/M10	3/M10

AL-T-Duplex-Suspension-Connector

Conductor-Conductor

Dim. of Conductor				Code	Technical Data of Connector									
ØA		ØB			Max. Curr.	Dim. Connector				Bolt Dim.		Suspension		
Min.	Max.	Min.	Max.			C	D	E	F	ØA	ØB	Bolt Dim.	Fig.	G
24,1	33,0	24,1	33,0	1SF200-046	2500	50	188	188	90	M10	M10	Ø22	1	
24,1	33,0	24,1	33,0	1SF250-049	2500	100	136	127	35	M10	M10	Ø19	1	
24,1	33,0	24,1	33,0	1SF250-050	2500	100	136	127	35	M10	M10	Ø22	1	
24,1	33,0	24,1	33,0	1SF250-036	2500	200	136	127	75	M10	M10	Ø22	1	
24,1	33,0	33,1	42,0	1SF250-048	2500	100	136	127	75	M10	M10	Ø19	1	
33,1	42,0	33,1	42,0	1SF200-056	3200	60	136	127	100	M10	M10	Ø19	1	
33,1	42,0	33,1	42,0	1SF200-057	3200	60	136	127	100	M10	M10	Ø22	1	
42,1	44,0	24,1	33,0	1SF200-043	2500	100	130	131	95	M10	M10	Ø22	1	
42,1	44,0	42,1	44,0	1SF250-046	3200	100	118	118	80	M10	M10	Ø22	1	

Figur 1

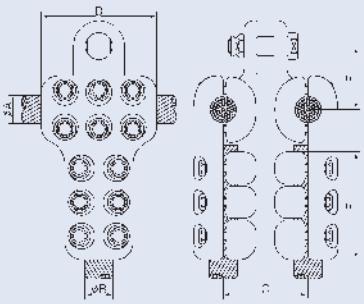

Figur 2

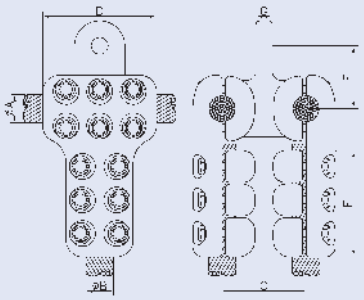

AL-90°-Duplex-Flat Terminal

Conductor-Flat Terminal

Dim. of Conductor				Code	Technical Data of Connector						
ØA		C	D		Max. Current	Dim. of Connector					Bolt Dim.
Min.	Max.					E	F	G	H	L	ØA
24,1	33,0	85	85	1GD030-051	1600	20	200	96	140	163	M10
24,1	33,0	100	100	1GD030-050	1600	20	200	96	140	178	M10
33,1	42,0	75	75	1GD020-240	1600	15	90	96	120	172	M10
33,1	42,0	100	100	1GD030-390	1600	20	450	98	110	152	M10

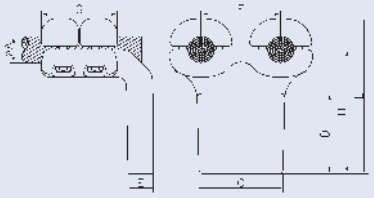

24,1	33,0	80	80	1GD020-210	2000	30	100	136	125	165	M10
24,1	33,0	100	100	1GD020-211	2000	25	100	136	145	185	M10
24,1	33,0	100	100	1GD030-100	2200	30	200	136	155	194	M10
24,1	33,0	100	100	1GD030-425	2500	20	457	136	50	100	M10
24,1	33,0	120	120	1GD020-213	2500	20	100	136	165	205	M10
33,1	42,0	75	75	1GD020-283	2000	30	90	136	133	200	M10
33,1	42,0	85	85	1GD020-282	2000	30	90	136	140	182	M10
33,1	42,0	100	100	1GD010-106	3200	30	60	136	165	211	M10
33,1	42,0	100	100	1GD020-285	2000	30	90	136	165	207	M10
33,1	42,0	100	100	1GD030-232	2500	25	200	118	110	152	M10
33,1	42,0	125	125	1GD020-280	3200	30	90	136	180	222	M10
33,1	42,0	125	125	1GD020-303	2500	30	150	136	180	222	M10
33,1	42,0	125	125	1GD030-333	2000	25	330	136	140	182	M10
33,1	42,0	200	100	1GD010-104	3200	25	60	136	170	216	M10
33,1	42,0	200	100	1GD020-281	3200	25	90	136	152	194	M10
33,1	42,0	200	100	1GD020-304	3200	30	150	136	155	197	M10
33,1	42,0	200	100	1GD030-230	3200	25	200	136	150	192	M10
42,1	44,0	80	80	1GD020-337	2500	30	150	136	140	185	M10
42,1	44,0	100	100	1GD020-308	2500	35	100	136	150	195	M10
42,1	44,0	100	100	1GD020-339	3000	35	150	136	160	205	M10
42,1	44,0	125	125	1GD020-336	4000	30	100	136	157	200	M10
42,1	44,0	125	125	1GD030-271	3200	25	200	118	157	200	M10
42,1	44,0	200	100	1GD020-307	3200	25	90	136	150	195	M10
42,1	44,0	200	100	1GD030-441	3200	30	400	136	110	155	M10
42,1	44,0	200	100	1GD030-442	3200	30	450	136	110	155	M10
44,1	52,0	80	80	1GD020-337	2500	30	150	136	140	185	M10
44,1	52,0	100	100	1GD020-339	3000	35	150	136	160	205	M10
44,1	52,0	125	125	1GD020-336	4000	30	100	136	157	200	M10
44,1	52,0	125	125	1GD030-271	3200	25	200	118	157	200	M10
44,1	52,0	200	100	1GD030-441	3200	30	400	136	110	155	M10
44,1	52,0	200	100	1GD030-442	3200	30	450	136	110	155	M10
52,1	63,0	200	100	1GD030-295	3200	30	200	136	160	210	M10

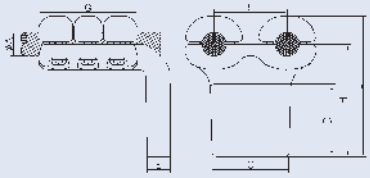

AL-90°-Duplex-Flat Terminal

Conductor-Flat Terminal

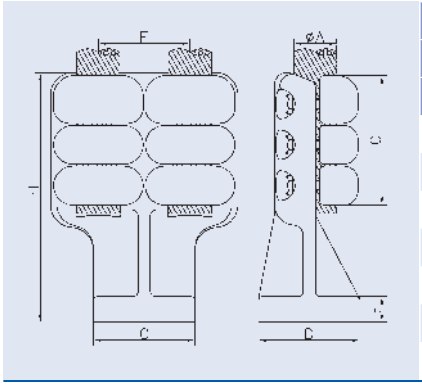

Dimension of Conductor				Code	Technical Data of Connector					
ØA		C	D		Max. Current	Dim. of Connector				Bolt Dim.
Min.	Max.					E	F	G	H	ØA
24,1	33,0	100	100	1GD127-030	2500	25	100	127	235	M10
33,1	42,0	100	100	1GD127-040	2500	25	90	127	245	M10
33,1	42,0	200	100	1GD127-045	2500	25	100	127	245	M10
42,1	44,0	200	100	1GD127-050	3000	25	100	127	245	M10

AL-90°-Duplex-Flat Terminal

Conductor-Flat Terminal

Dim. of Conductor				Code	Technical Data of Connector							
ØA		C	D		Max. Current	Dim. of Connector					Bolt Dim. ØA	Inst. Die No.
Min.	Max.					E	F	G	H	L		
29,1	29,9	100	100	1GD170-030	2000	20	100	160	135	168	M10	KZ 52
30,0	30,9	100	100	1GD170-031	2000	20	100	160	135	168	M10	KZ 52
31,9	32,8	100	100	1GD170-020	2000	25	200	160	135	168	M10	KZ 52

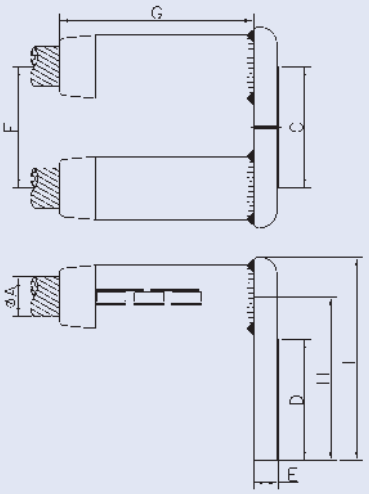

AL-90°-Triplex-Flat Terminal

Conductor-Flat Terminal

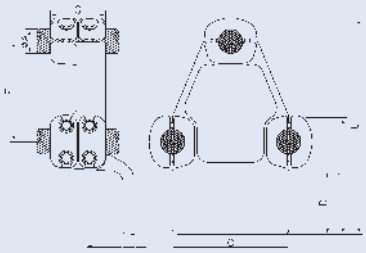

Dim. of Conductor				Code	Technical Data of Connector						
ØA		C	D		Max. Current	Dim. of Connector					Bolt Dim.
Min.	Max.					E	F	G	H	L	ØA
33,1	42,0	125	125	1GD315-332	3000	25	330	136	26	373	M10
33,1	42,0	200	100	1GD315-200	1600	20	200	96	218	374	M10
33,1	42,0	200	100	1GD315-330	4000	25	330	136	22	373	M10

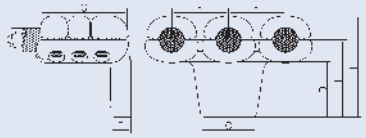

33,1	42,0	100	100	1GD320-264	3150	35	200	136	135	177	M10
33,1	42,0	125	125	1GD320-130	4000	35	100	136	181	223	M10
33,1	42,0	125	125	1GD320-267	4000	35	200	136	160	202	M10
33,1	42,0	200	100	1GD320-188	4000	25	100	136	152	194	M10
33,1	42,0	200	100	1GD320-266	4000	25	200	136	135	177	M10
42,1	44,0	200	100	1GD320-189	4000	25	100	136	152	194	M10

AL-Angle-Duplex-Connector

Conductor-Conductor

Dim. of Conductor				Code	Technical Data of Connector								
ØA		ØB			Max. Current	Dim. of Connector					Bolt Dim.	
Min.	Max.	Min.	Max.			C	D	E	F	α	ØA	ØB
24,1	33,0	24,1	33,0	1FC210-040	2500	60	144	144	240	45°	M10	M10
24,1	31,6	42,1	44,0	1FC210-062	2500	80	144	131	241	45°	M10	M10
31,7	33,0	42,1	44,0	1FC210-060	2500	80	144	131	241	45°	M10	M10
42,1	44,0	42,1	44,0	1FC210-080	3200	80	130	130	256	45°	M10	M10

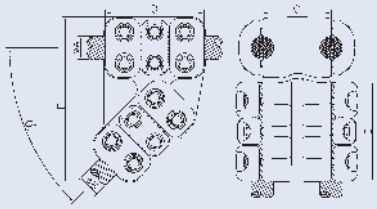

AL-Angle-Duplex-Terminal

Conductor-Stud

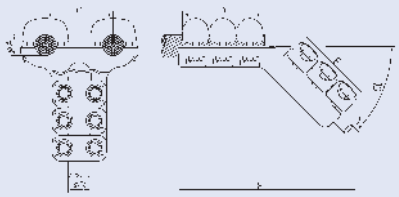

Dim. of Conductor			Code	Technical Data of Connector							
ØA		ØB		Max. Current	Dim. of Connector					Bolt Dim.	
Min.	Max.				C	D	E	F	α	ØA	ØB
24,1	33,0	40,0	1FC030-054	2500	450	136	162	177	45°	M10	M10
24,1	33,0	50,0	1FC030-054	2500	450	136	162	177	45°	M10	M10
33,1	42,0	30,0	1FC020-180	2000	90	136	136	176	45°	M10	M10
33,1	42,0	30,0	1FC030-055	2000	200	136	136	162	45°	M10	M10
33,1	42,0	40,0	1FC010-200	2500	60	136	136	186	45°	M10	M10
33,1	42,0	40,0	1FC020-180	2000	90	136	136	176	45°	M10	M10
33,1	42,0	40,0	1FC030-055	2000	200	136	136	162	45°	M10	M10
33,1	42,0	50,0	1FC010-200	2500	60	136	136	186	45°	M10	M10
33,1	42,0	50,0	1FC020-140	3200	90	127	136	185	45°	M10	M10
33,1	42,0	60,0	1FC020-140	3200	90	127	136	185	45°	M10	M10
42,1	44,0	50,0	1FC020-060	3200	100	130	136	187	45°	M10	M10
42,1	44,0	60,0	1FC020-060	3200	100	130	136	187	45°	M10	M10

AL-Angle-Duplex-Flat Terminal

Conductor-Flat Terminal

Dim. of Conductor				Code	Technical Data of Connector						
ØA		C	D		Max. Current	Dim. of Connector					Bolt Dim. ØA
Min.	Max.					E	F	G	H	α	
24,1	33,0	100	100	1GC020-180	2000	25	200	136	138	45°	M10
33,1	42,0	100	100	1GC010-046	3200	30	60	136	183	45°	M10
33,1	42,0	100	100	1GC020-242	3500	30	90	127	167	45°	M10
33,1	42,0	125	125	1GC020-240	3200	30	90	127	182	45°	M10
33,1	42,0	200	100	1GE020-042	3200	20	90	136	152	30°	M10
33,1	42,0	200	100	1GC020-189	3200	25	200	136	159	45°	M10
42,0	44,0	100	100	1GC020-244	2500	30	100	127	162	45°	M10
52,1	63,0	100	100	1GC020-275	2500	30	200	136	180	45°	M10
52,1	63,0	200	100	1GC020-285	3200	30	200	136	180	45°	M10

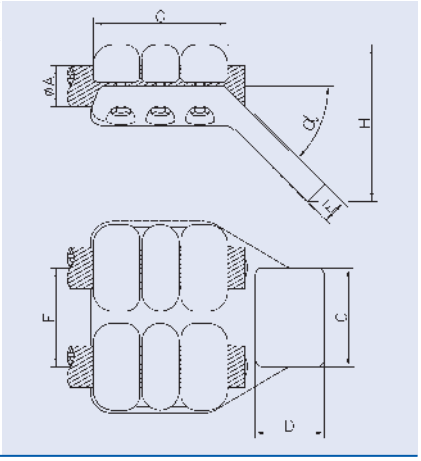

AL-Duplex-Support

Conductor

Dim. of Conductor ØA		Code	Technical Data of Support									
			B	E	Bolt Dim.	Baseplate						
						Dimension			Drillingplan			
Min.	Max.				ØA	ØC	ØD	F	Pcs.	ØG	±α	β
20,0	25,8	1HC008-020	200	70	M10	127	160	10	4	18		45°
25,8	30,0	1HC005-070	100	76	M10	127	160	6	4	18		
25,8	30,0	1HC008-020	200	70	M10	127	160	10	4	18		45°
30,1	32,9	1HC005-123	60	60	M10	120	145	6	8	14		
30,1	32,9	1HC005-121	60	60	M10	127	160	6	8	18		
30,1	32,9	1HC005-122	60	60	M10	225	260	6	8	18		
30,1	32,9	1HC005-150	80	75	M10	127	160	6	4	18		45°
30,1	32,9	1HC005-151	80	75	M10	127	160	6	8	18		
30,1	32,9	1HC005-168	100	70	M10	120	145	6	4	14		45°
30,1	32,9	1HC005-162	100	75	M10	127	160	6	4	18		45°
30,1	32,9	1HC005-165	100	75	M10	127	160	6	8	18		
30,1	32,9	1HC005-160	100	75	M10	225	260	6	8	18		
30,1	32,9	1HC008-039	150	70	M10	127	160	10	4	14		45°
30,1	32,9	1HC008-057	150	100	M10	225	160	10	8	18		
30,1	32,9	1HC008-040	200	70	M10	127	160	10	4	18		45°
30,1	32,9	1HC008-042	200	70	M10	225	260	10	8	18		
30,1	32,9	1HC008-044	400	70	M10	127	160	10	4	18		45°
30,1	32,9	1HC008-047	457	70	M10	127	160	10	8	18		
33,0	35,9	1HC005-159	100	70	M10	76	110	6	4	14		45°
33,0	35,9	1HC008-039	150	70	M10	127	160	10	4	14		45°
33,0	35,9	1HC008-057	150	100	M10	225	160	10	8	18		
33,0	35,9	1HC008-040	200	70	M10	127	160	10	4	18		45°
33,0	35,9	1HC008-042	200	70	M10	225	260	10	8	18		
33,0	35,9	1HC008-044	400	70	M10	127	160	10	4	18		45°
33,0	35,9	1HC008-047	457	70	M10	127	160	10	8	18		
36,0	39,0	1HC005-190	60	70	M10	127	160	6	4	18		45°
36,0	39,0	1HC005-180	80	75	M10	127	160	6	4	18		45°
36,0	39,0	1HC005-181	80	75	M10	127	160	6	8	18		
36,0	39,0	1HC005-182	90	70	M10	76	105	6	4	14		45°
36,0	39,0	1HC005-178	90	70	M10	120	145	6	4	14		45°
36,0	39,0	1HC005-179	90	70	M10	127	160	6	4	18		45°
36,0	39,0	1HC005-177	90	70	M10	225	260	6	8	18		
36,0	39,0	1HC005-193	100	75	M10	225	260	6	8	18		
36,0	39,0	1HC008-039	150	70	M10	127	160	10	4	14		45°
36,0	39,0	1HC008-057	150	100	M10	225	160	10	8	18		
36,0	39,0	1HC008-040	200	70	M10	127	160	10	4	18		45°

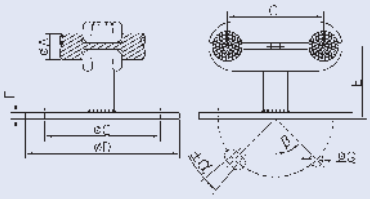

AL-Duplex-Support

Conductor

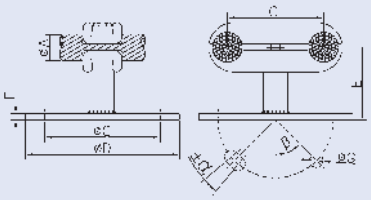

Dim. of Conductor ØA		Code	Technical Data of Support									
			B	E	Bolt Dim.	Baseplate						
						Dimension			Drillingplan			
Min.	Max.				ØA	ØC	ØD	F	Pcs.	ØG	±α	β
36,0	39,0	1HC008-042	200	70	M10	225	260	10	8	18		
36,0	39,0	1HC008-044	400	70	M10	127	160	10	4	18		45°
36,0	39,0	1HC008-047	457	70	M10	127	160	10	8	18		
39,1	44,0	1HC005-199	70	90	M10	127	160	6	8	18		
39,1	44,0	1HC005-208	70	80	M10	225	260	12	8	18		
39,1	44,0	1HC005-212	80	80	M10	127	160	6	8	18		
39,1	44,0	1HC005-209	90	80	M10	120	145	6	4	14		45°
39,1	44,0	1HC005-205	90	80	M10	127	160	6	4	18		45°
39,1	44,0	1HC005-213	100	79	M10	127	160	6	8	18		
39,1	44,0	1HC005-206	100	80	M10	225	260	6	8	18		
39,1	44,0	1HC008-039	150	70	M10	127	160	10	4	14		45°
39,1	44,0	1HC008-057	150	100	M10	225	160	10	8	18		
39,1	44,0	1HC008-040	200	70	M10	127	160	10	4	18		45°
39,1	44,0	1HC008-042	200	70	M10	225	260	10	8	18		
39,1	44,0	1HC008-044	400	70	M10	127	160	10	4	18		45°
39,1	44,0	1HC008-047	457	70	M10	127	160	10	8	18		
44,1	51,0	1HC005-185	100	70	M12	120	145	6	4	14		45°
44,1	51,0	1HC008-053	200	100	M12	127	160	10	8	18		
44,1	51,0	1HC008-054	200	100	M12	225	260	10	8	18		
51,1	63,0	1HC005-255	150	140	M12	178	215	12	4	22		45°
51,1	63,0	1HC008-055	200	100	M12	127	160	10	4	18	25°	45°
51,1	63,0	1HC008-058	200	150	M12	127	160	12	4	18	25°	45°
51,1	63,0	1HC008-059	400	115	M12	127	160	12	4	18	25°	45°

AL-Triplex-Support

Conductor

Dim. of Conductor ØA		Code	Technical Data of Support									
			B	E	Bolt Dim.	Baseplate						
						Dimension			Drillingplan			
Min.	Max.				ØA	ØC	ØD	F	Pcs.	ØG	±α	β
30,0	44,0	1HC315-040	200	80	M10	76	105	8	4	14		45°
30,0	44,0	1HC315-045	200	80	M10	127	160	8	4	18		45°
30,0	44,0	1HC325-040	200	120	M10	178	215	10	4	22		45°
30,0	44,0	1HC325-041	200	120	M10	225	260	10	8	18		
30,0	44,0	1HC315-050	330	80	M10	127	160	8	8	18		
30,0	44,0	1HC315-055	330	80	M10	225	260	8	8	18		

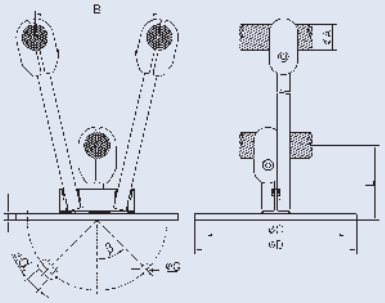

30,0	35,9	1HC320-007	90	130	M10	120	145	12	4	14		45°
30,0	35,9	1HC320-004	90	130	M10	127	160	12	4	18	5°	45°
30,0	35,9	1HC320-001	100	130	M10	76	105	12	4	14		45°
30,0	35,9	1HC318-100	100	120	M10	178	215	12	4	22		45°
30,0	35,9	1HC320-009	200	125	M10	127	160	10	8	18	5°	
30,0	35,9	1HC320-006	200	125	M10	225	260	10	8	18	5°	
36,0	39,0	1HC320-007	90	130	M10	120	145	12	4	14		45°
36,0	39,0	1HC320-004	90	130	M10	127	160	12	4	18	5°	45°
36,0	39,0	1HC320-001	100	130	M10	76	105	12	4	14		45°
36,0	39,0	1HC318-066	100	120	M10	66	100	12	4	12		45°
36,0	39,0	1HC318-127	100	120	M10	127	160	12	8	18		
36,0	39,0	1HC318-100	100	120	M10	178	215	12	4	22		45°
36,0	39,0	1HC320-009	200	125	M10	127	160	10	8	18	5°	
36,0	39,0	1HC320-006	200	125	M10	225	260	10	8	18	5°	
39,1	42,0	1HC320-007	90	130	M10	120	145	12	4	14		45°
39,1	42,0	1HC320-004	90	130	M10	127	160	12	4	18	5°	45°
39,1	42,0	1HC320-001	100	130	M10	76	105	12	4	14		45°
39,1	42,0	1HC318-100	100	120	M10	178	215	12	4	22		45°
39,1	42,0	1HC320-009	200	125	M10	127	160	10	8	18	5°	
39,1	42,0	1HC320-006	200	125	M10	225	260	10	8	18	5°	
42,1	44,0	1HC318-100	100	120	M10	178	215	12	4	22		45°
42,1	44,0	1HC320-008	200	125	M10	225	260	12	8	18	5°	

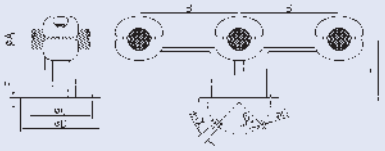

AL-Quadruple-Support

Conductor

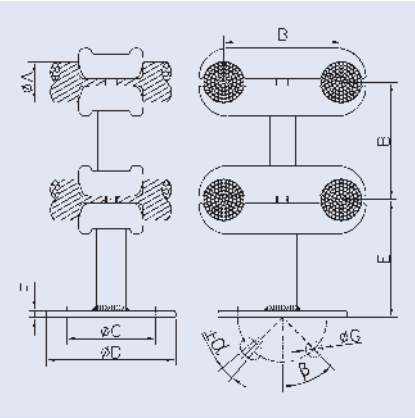

Dim. of Conductor ØA		Code	Technical Data of Support									
			B	E	Bolt Dim.	Baseplate						
						Dimension			Drillingplan			
Min.	Max.				ØA	ØC	ØD	F	Pcs.	ØG	±α	β
33,0	35,9	1HC405-005	100	100	M10	76	110	6	4	14		45°
36,0	39,2	1HC405-020	80	89	M10	145	120	6	4	14		45°
44,1	51,0	1HC405-048	100	90	M12	127	160	15	4	18		45°

AL-Duplex-Earthing-Stirrup

Conductor

Dim. of Conductor		Code	Technical Data of Connector				
ØA			Dim. of Connector				Bolt Dim.
Min.	Max.		B	C	D	ØE	ØA
24,1	33,0	1HG005-050	50	120	137	30	M10
24,1	33,0	1HG005-072	80	100	130	35	M10
33,1	42,0	1HG005-130	60	170	152	30	M10
33,1	42,0	1HG005-060	60	100	130	35	M10
33,1	42,0	1HG005-071	75	100	130	35	M10
33,1	42,0	1HG005-100	90	100	130	35	M10
33,1	42,0	1HG005-156	100	170	164	25	M10
33,1	42,0	1HG005-158	100	170	152	30	M10
33,1	42,0	1HG005-160	90	170	152	30	M10
33,1	42,0	1HG005-188	150	180	207	25	M10
33,1	42,0	1HG005-192	150	180	207	30	M10
33,1	42,0	1HG005-196	200	180	207	25	M10
33,1	42,0	1HG005-202	200	170	155	30	M10
42,1	44,0	1HG005-120	70	170	155	30	M10
42,1	44,0	1HG005-230	70	170	155	35	M10
42,1	44,0	1HG005-161	90	170	152	30	M10
42,1	44,0	1HG005-210	100	170	165	25	M10
42,1	44,0	1HG005-159	100	170	152	30	M10
42,1	44,0	1HG005-189	150	180	207	25	M10
42,1	44,0	1HG005-193	150	180	207	30	M10
42,1	44,0	1HG005-197	200	180	207	25	M10
42,1	44,0	1HG005-201	200	200	147	30	M10
44,1	52,0	1HG005-230	70	170	155	35	M10
44,1	52,0	1HG005-210	100	170	165	25	M10
52,1	63,0	1HG005-250	200	170	155	30	M10

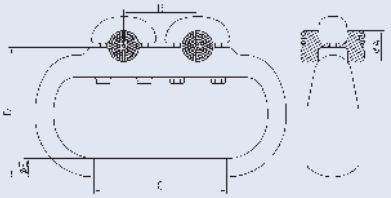

33,1	42,0	1HG110-011	60	170	194	30	M10
33,1	42,0	1HG110-032	90	170	194	30	M10
42,1	44,0	1HG110-031	70	170	194	30	M10

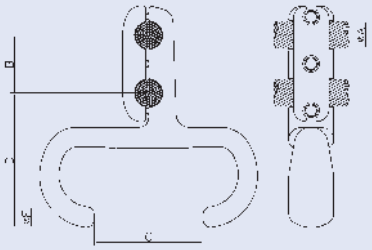

AL-Quadruple-Earthing-Stirrup

Conductor

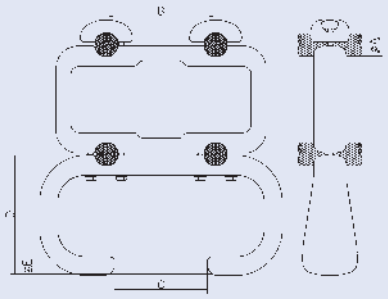

Dim. of Conductor		Code	Technical Data of Connector				
ØA			Dim. of Connector				Bolt Dim.
Min.	Max.		B	C	D	ØE	ØA
24,1	33,0	1HG407-010	45	100	130	35	M10
24,1	33,0	1HG410-020	80	100	210	35	M10
33,1	42,0	1HG407-040	60	170	152	30	M10
33,1	42,0	1HG410-010	90	100	192	35	M10
33,1	42,0	1HG407-041	200	170	222	30	M10
42,1	44,0	1HG410-011	90	100	192	35	M10

AL-Expansion-Bus-Support-Coupler

Tube-Tube

Dim. of Cond	Code	Technical Dates of Connector											
		B	Bolt dim.	Baseplate							Currentbridge		Max. Curr.
				Dimension			Drillingplan				ØG		
ØA			ØA	ØC	ØD	E	Pcs.	ØF	±α	β	Pcs.	Max.	
63	1KA200-080	85	M10	127	160	10	4	14		45°	2	34.4	2300
80	1KA198-080	100	M10	76	110	10	4	14			4	34.4	3200
80	1KA200-155	100	M10	76	100	10	8	14			2	39.2	2400
80	1KA200-159	100	M10	120	145	10	4	14		45°	2	44.8	2400
80	1KA200-160	100	M10	120	145	10	8	14			2	44.8	2400
80	1KA200-162	100	M10	127	160	10	4	18		45°	2	39.2	2400
80	1KA200-149	100	M10	127	160	10	8	18			2	39.2	2400
100	1KA198-102	100	M10	76	110	10	4	14			4	34.4	3600
100	1KA198-103	100	M10	76	110	10	8	14			4	34.4	3600
100	1KA200-297	100	M10	127	160	10	4	18		45°	2	44.8	2600
100	1KA198-101	130	M10	127	160	10	8	18			4	39.2	3600
120	1KA198-119	130	M10	76	100	10	8	14			2	44.8	3000
120	1KA200-399	130	M10	76	110	10	8	14			4	44.8	4000
120	1KA198-120	130	M10	120	145	10	8	14	5°		2	44.8	3000
120	1KA198-125	130	M10	127	160	12	8	14	5°		2	44.8	3000
120	1KA198-122	130	M10	127	160	12	8	18	5°		2	44.8	3000
120	1KA200-387	130	M10	225	260	15	8	18			2	47.9	3400
120	1KA198-124	130	M10	225	260	12	8	18	5°		2	44.8	3000
140	1KA198-141	140	M10	127	160	12	4	18			2	44.8	3200
140	1KA198-143	140	M10	127	160	12	8	18	5°		2	44.8	3200
140	1KA198-144	150	M10	127	160	12	4	18	5°	45°	4	34.4	4500
140	1KA198-145	140	M10	178	215	12	8	22			4	39.2	4500
140	1KA198-148	140	M10	178	220	15	4	22	25°		4	39.2	4500
150	1KA198-151	150	M10	127	160	12	8	18			2	44.8	3200
150	1KA198-150	150	M10	225	260	12	4	18	5°	45°	4	34.4	4500
150	1KA198-153	150	M10	225	260	12	8	18			4	39.2	4500
160	1KA198-160	150	M10	120	145	12	4	14		45°	2	44.8	3200
160	1KA200-427	150	M10	120	145	12	4	14		45°	4	34.4	4500
160	1KA198-163	150	M10	127	160	12	4	18		45°	2	44.8	4500
160	1KA198-165	150	M10	127	160	12	8	18			2	44.8	3200
160	1KA200-435	150	M12	127	160	12	8	18	5°		2	44.8	3200
160	1KA198-166	150	M10	225	260	12	4	18	5°	45°	4	34.4	4500
160	1KA200-456	150	M10	225	260	16	8	18	5°		4	34.4	4500
200	1KA198-203	180	M12	120	145	15	8	14	5°		2	44.8	3100
200	1KA198-206	180	M12	120	145	10	8	14	5°		4	44.8	6000
200	1KA198-209	170	M12	127	160	15	8	18			2	44.8	3100

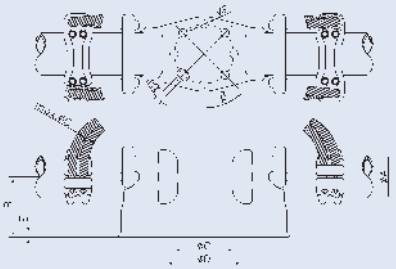

AL-Expansion-Bus-Support-Coupler

Tube-Tube

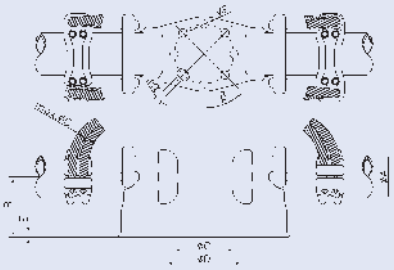

Dim. of Cond	Code	Technical Dates of Connector											
		B	Bolt dim.	Baseplate							Currentbridge		Max. Curr.
				Dimension			Drillingplan				ØG		
ØA			ØA	ØC	ØD	E	Pcs.	ØF	±α	β	Pcs.	Max.	
200	1KA198-207	170	M12	127	160	10	8	18			4	44.8	6000
200	1KA200-475	175	M12	127	160	15	4	18		45°	4	44.8	6000
200	1KA200-477	190	M12	127	160	15	4	18		45°	4	44.8	6000
200	1KA200-474	190	M12	127	160	15	8	18	5°		2	44.8	3100
200	1KA198-208	170	M12	178	215	15	8	22			4	44.8	6000
200	1KA198-210	170	M12	225	260	12	8	18			2	44.8	3100
250	1KA200-560	225	M12	127	160	15	8	18	5°		2	44.8	3100
250	1KA200-250	225	M12	225	260	15	8	18	5°		2	44.8	3100
250	1KA200-559	200	M12	225	260	15	8	18	5°		2	44.8	3100
250	1KA200-558	240	M12	225	260	15	8	18	5°		2	44.8	3100
2,5“	1KA200-158	100	M10	225	260	10	8	18	5°		2	44.8	2400
3“	1KA198-091	100	M10	127	160	10	4	18	5°	45°	2	39.2	2600
3,5“	1KA198-102	100	M10	76	110	10	4	14			4	34.4	3600
3,5“	1KA198-103	100	M10	76	110	10	8	14			4	34.4	3600
3,5“	1KA200-297	100	M10	127	160	10	4	18		45°	2	44.8	2600
3,5“	1KA198-101	130	M10	127	160	10	8	18			4	39.2	3600
4“	1KA198-117	130	M10	127	160	12	4	18	13°	45°	2	44.8	3000
4“	1KA198-116	150	M10	127	160	12	4	18	13°	45°	2	44.8	3000
4“	1KA198-111	150	M10	127	160	12	8	18			4	44.8	4000
4“	1KA198-114	150	M10	225	260	12	8	18			2	44.8	3000
4,5“	1KA198-126	130	M10	127	160	10	8	18	5°		2	44.8	3000
5“	1KA198-141	140	M10	127	160	12	4	18			2	44.8	3200
5“	1KA198-143	140	M10	127	160	12	8	18	5°		2	44.8	3200
5“	1KA198-144	150	M10	127	160	12	4	18	5°	45°	4	34.4	4500
5“	1KA198-145	140	M10	178	215	12	8	22			4	39.2	4500
5“	1KA198-148	140	M10	178	220	15	4	22	25°		4	39.2	4500
6“	1KA198-168	150	M10	127	160	12	8	18			4	44.8	5000
8“	1KA198-221	180	M10	225	260	12	8	18			4	44.8	6250

AL-Expansion-Bus-Support-Coupler

Tube-Tube

Dim. of Cond	Code	Technical Dates of Connector											
		B	Bolt dim.	Baseplate							Currentbridge		
				Dimension			Drillingplan				ØG		Max. Curr.
ØA			ØA	ØC	ØD	E	Pcs.	ØF	±α	β	Pcs.	Max.	
140	1KA100-139	140	M10	76	110	12	8	14			2	44.8	3200
140	1KA100-140	140	M10	127	160	12	8	18	5°		2	44.8	3200
140	1KA100-141	140	M10	127	160	12	8	18	5°		4	34.4	4500
160	1KA100-161	150	M10	127	160	12	8	18			2	44.8	3200
160	1KA100-162	150	M10	225	260	12	8	18			2	44.8	3200
250	1KA100-250	225	M12	127	160	15	8	18			4	39.2	5300
5″	1KA100-139	140	M10	76	110	12	8	14			2	44.8	3200
5″	1KA100-140	140	M10	127	160	12	8	18	5°		2	44.8	3200
5″	1KA100-141	140	M10	127	160	12	8	18	5°		4	34.4	4500

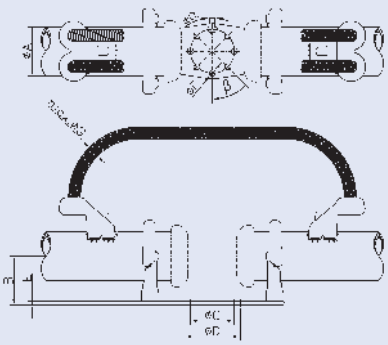

AL-Expansion-Bus-Support-Coupler

Tube-Tube (sliding)

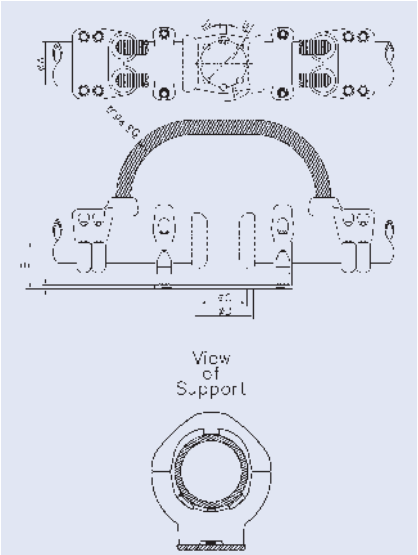

Dim. of Cond	Code	Technical Dates of Connector												
		B	Bolt dim.	Baseplate							Currentbridge			Max. Curr.
				Dimension			Drillingplan				ØG			
ØA			ØA	ØC	ØD	E	Pcs.	ØF	±α	β	Pcs.	Max.		
80	1KA250-080	100	M12	120	145	10	8	14	5°		2	39.2	2400	
100	1KA250-043	120	M12	120	145	10	8	14	5°		2	39.2	2600	
100	1KA250-040	120	M12	127	160	10	4	18		45°	1	44.8	1550	
120	1KA250-128	130	M12	225	260	10	8	18	5°		2	44.8	3100	
160	1KA250-159	150	M12	120	145	12	4	14	5°	45°	2	39.2	2650	
160	1KA250-045	150	M12	127	160	12	8	18	5°		2	39.2	2650	
200	1KA198-230	170	M12	225	260	15	8	18			2	44.8	3100	
250	1KA250-250	225	M12	225	260	15	8	18	5°		2	44.8	3100	
3,5“	1KA250-043	120	M12	120	145	10	8	14	5°		2	39.2	2600	
3,5“	1KA250-040	120	M12	127	160	10	4	18		45°	1	44.8	1550	
8“	1KA250-222	180	M12	225	260	15	8	18	5°		2	44.8	3100	

AL-Expansion-Bus-Support-Coupler

Tube-Tube (roller bearing)

Dim. of Cond	Code	Technical Dates of Connector										
		B	Bolt dim.	Baseplate						Currentbridge		Max. Curr.
				Dimension		Drillingplan				ØF		
ØA			ØA	ØC	D	Pcs.	ØE	±α	β	Pcs.	Max.	
160	1KA360-160	150	M10	127	17	4	18	5°	45°	2	44.8	3200
250	1KA360-250	200	M10	120	17	4	14	5°	45°	2	44.8	3200
8“	1KA360-220	190	M10	225	17	4	18	5°	45°	2	44.8	3200

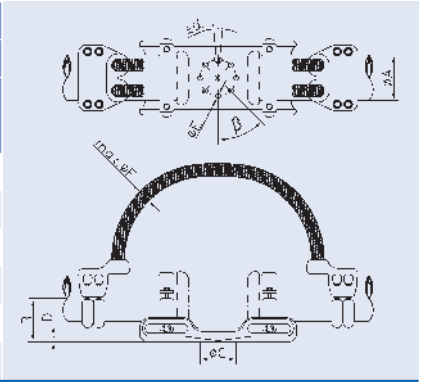

160	1KA107-165	150	M10	225	17	4	18	5°	45°	2	47.9	3400
200	1KA107-200	175	M10	120	17	4	14	5°	45°	2	47.9	3400
250	1KA107-245	200	M10	120	17	4	14	5°	45°	2	47.9	3400
250	1KA107-247	200	M10	225	17	4	18	5°	45°	4	47.9	6800

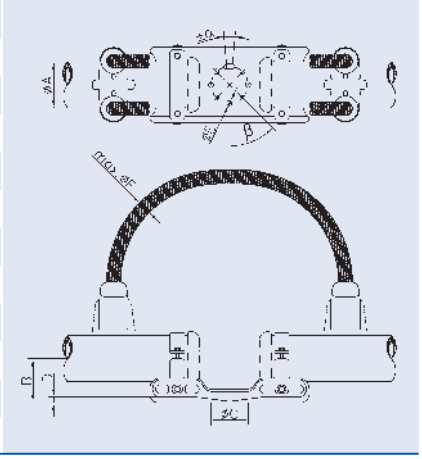

AL-Expansion-Flat Terminal

Tube-Flat Terminal

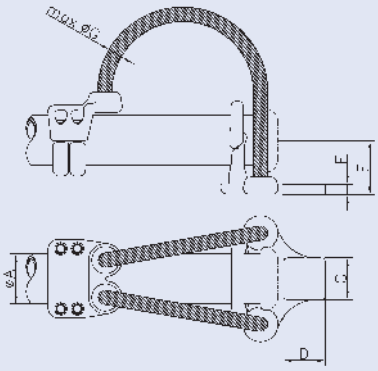

Dimension of Conductor			Code	Technical Dates of Connector					
				Max. Current	E	F	Currentbridge ØG		Bolt Dim.
ØA	C	D					Pcs.	Max.	ØA
80	200	100	1MA030-132	3100	20	100	2	44.8	M12
100	100	100	1MA030-602	2250	20	120	2	34.4	M12
100	100	100	1MA030-100	3200	30	100	2	44.8	M12
100	125	125	1MA030-102	3200	30	130	4	34.4	M12
100	200	100	1MA030-130	2700	20	115	2	39.2	M12
120	100	100	1MA030-626	3200	30	130	2	44.8	M12
120	125	125	1MA030-143	3200	30	130	4	34.4	M12
120	200	100	1MA030-627	3200	20	130	2	44.8	M12
120	200	100	1MA030-641	3200	20	140	2	44.8	M12
140	125	125	1MA030-649	2500	20	140	2	44.8	M12
160	100	100	1MA030-660	2500	20	155	2	39.2	M12
160	200	100	1MA030-689	3200	20	150	2	44.8	M12
160	200	100	1MA030-683	4000	20	150	4	34.4	M12
160	200	100	1MA030-680	2700	20	155	2	39.2	M12
200	200	100	1MA030-706	3200	20	175	2	44.8	M12
200	200	100	1MA030-703	3200	20	180	2	44.8	M12
250	100	100	1MA030-754	3200	30	225	2	44.8	M12
250	200	100	1MA030-250	4000	30	235	4	39.2	M12
3,5“	100	100	1MA030-100	2700	30	100	2	39.2	M12
3,5“	125	125	1MA030-102	3200	30	130	4	34.4	M12
5“	125	125	1MA030-649	2500	20	140	2	44.8	M12

AL-Expansion-Flat Terminal

Tube (sliding)-Flat Terminal

Dimension of Conductor			Code	Technical Dates of Connector					
				Max. Current	E	F	Currentbridge ØG		Bolt Dim.
ØA	C	D					Pcs.	Max.	ØA
80	100	100	1MA060-075	2500	25	90	2	44.8	M12
120	100	100	1MA060-124	3200	30	130	2	44.8	M12
160	100	100	1MA060-168	2500	25	150	2	44.8	M12
160	100	100	1MA060-170	2500	25	160	2	44.8	M12
160	200	100	1MA060-164	4000	20	150	2	44.8	M12
160	200	100	1MA030-687	4000	20	150	4	34.4	M12
200	200	100	1MA030-704	4000	20	200	4	39.2	M12
250	100	100	1MA060-251	2500	30	225	2	44.8	M12

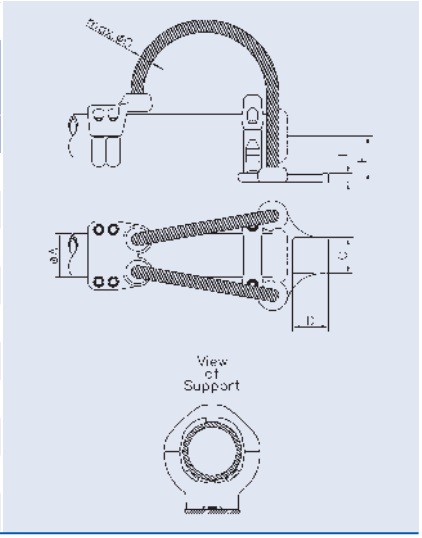

160	100	100	1MA015-165	2500	25	155	2	44.8	M12
200	100	100	1MA015-202	2500	20	150	2	34.4	M12
250	200	100	1MA015-250	4000	20	200	2	44.8	M12

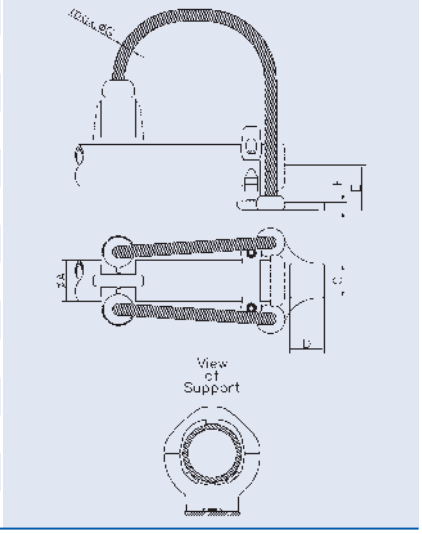

AL-Expansion-Flat Terminal

Tube (roller bearing)-Flat Terminal

Figur 1

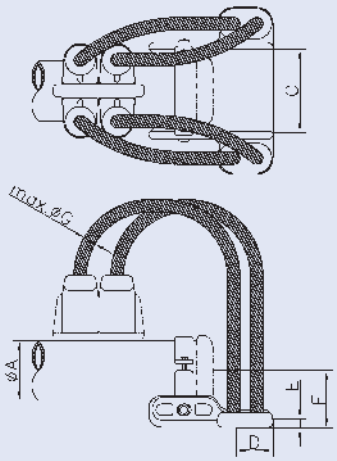

Figur 2

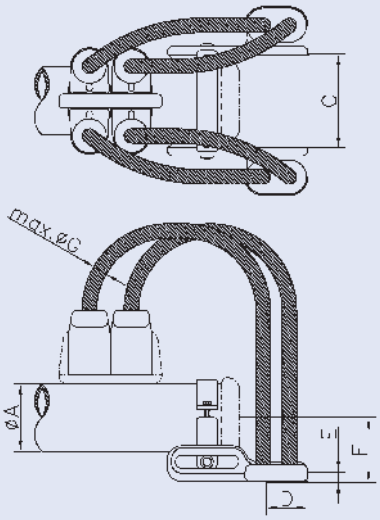

Dimension of Conductor			Code	Technical Dates of Connector						
				Max. Current	E	F	Currentbridge ØG		Bolt Dim.	Figur
ØA	C	D					Pcs.	Max.	ØA	
160	200	100	1MA315-160	3400	25	150	2	47.9	M12	1
160	200	100	1MA315-166	3400	25	150	2	47.9	M12	2
160	200	100	1MA315-162	4000	25	155	4	47.9	M12	1
160	200	100	1MA315-161	4000	25	155	4	47.9	M12	2
200	200	100	1MA315-200	3400	25	175	2	47.9	M12	1
200	200	100	1MA315-201	3400	25	175	2	47.9	M12	2
200	200	100	1MA315-202	4000	25	180	4	47.9	M12	2
250	200	100	1MA315-258	3400	25	200	2	47.9	M12	2
250	200	100	1MA315-253	4000	25	200	4	47.9	M12	1
250	200	100	1MA315-254	4000	25	200	4	47.9	M12	2
250	200	100	1MA315-250	3200	25	300	2	44.8	M12	1

AL-Expansion-Flat Terminal

Tube (inside sliding)-Flat Terminal

Dimension of Conductor					Code	Technical Dates of Connector					
						Max. Current	E	F	Currentbridge		Bolt Dim.
									ØG		
ØB	ØB		C	D							
	Min.	Max.							Pcs.	Max.	ØA
80	68	68	125	125	1MA520-080	3200	25		2	44.8	M12
100	88	90	125	125	1MA520-083	2700	25		2	39.2	M12
100	84	84	200	100	1MA530-102	2300	25	30	2	34.4	M12
100	84	84	200	100	1MA530-100	3400	25	30	4	27.5	M12
120	96	112	100	100	1MA530-114	2300	25	30	2	34.4	M12
120	88	102	125	125	1MA520-084	3200	25		2	44.8	M12
120	96	112	125	125	1MA530-115	2300	25	30	2	34.4	M12
120	96	96	200	100	1MA530-121	4000	25	-38	4	34.4	M12
120	104	104	200	100	1MA530-122	2300	25	30	2	34.4	M12
160	148	148	125	125	1MA530-124	3200	25		4	34.4	M12
160	148	148	200	100	1MA520-160	3200	30		2	44.8	M12
160	148	148	200	100	1MA530-123	4000	25		4	34.4	M12
3,5“	88	90	125	125	1MA520-083	2700	25		2	39.2	M12
4“	96	112	100	100	1MA530-114	2300	25	30	2	34.4	M12
4“	88	102	125	125	1MA520-084	3200	25		2	44.8	M12
4“	96	112	125	125	1MA530-115	2300	25	30	2	34.4	M12
4“	96	96	200	100	1MA530-121	4000	25	-38	4	34.4	M12
4“	104	104	200	100	1MA530-122	2300	25	30	2	34.4	M12
4,5“	96	112	100	100	1MA530-114	2300	25	30	2	34.4	M12
4,5“	88	102	125	125	1MA520-084	3200	25		2	44.8	M12
4,5“	96	112	125	125	1MA530-115	2300	25	30	2	34.4	M12

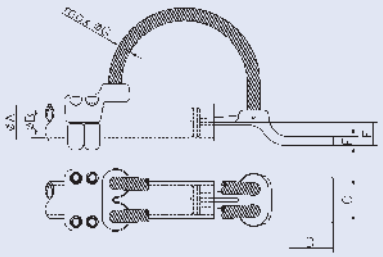

AL-Expansion-Connector

Tube-Stud

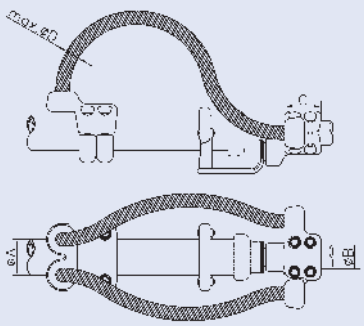

Dimension of Conductor		Code	Technical Dates of Connector					
			Max. Current	C	Currentbridge D		Bolt Dimension	
ØA	ØB				Pcs.	Max.	ØA	ØB
80.0	30.0	1LA040-080	2000	112	2	27.5	M12	M10
80.0	40.0	1LA040-080	2000	112	2	27.5	M12	M10
80.0	50.0	1LA040-080	2000	112	2	27.5	M12	M10
80.0	60.0	1LA040-080	2000	112	2	27.5	M12	M10
100.0	30.0	1LA040-099	2000	114	2	27.5	M12	M10
100.0	40.0	1LA040-099	2000	114	2	27.5	M12	M10
100.0	50.0	1LA040-099	2000	114	2	27.5	M12	M10
100.0	60.0	1LA040-099	2000	114	2	27.5	M12	M10
100.0	30.0	1LA040-100	3000	102	4	27.5	M12	M10
100.0	40.0	1LA040-100	3000	102	4	27.5	M12	M10
100.0	50.0	1LA040-100	3000	102	4	27.5	M12	M10
100.0	60.0	1LA040-100	3000	102	4	27.5	M12	M10
120.0	30.0	1LA030-064	3000	94	2	44.8	M12	M10
120.0	40.0	1LA030-064	3000	94	2	44.8	M12	M10
120.0	50.0	1LA030-064	3000	94	2	44.8	M12	M10
120.0	60.0	1LA030-064	3000	94	2	44.8	M12	M10
160.0	30.0	1LA040-160	3000	102	4	34.4	M12	M10
160.0	40.0	1LA040-160	3000	102	4	34.4	M12	M10
160.0	50.0	1LA040-160	3000	102	4	34.4	M12	M10
160.0	60.0	1LA040-160	3000	102	4	34.4	M12	M10
3“	30.0	1LA030-060	2600	93	2	39.2	M12	M10
3“	40.0	1LA030-060	2600	93	2	39.2	M12	M10
3“	50.0	1LA030-060	2600	93	2	39.2	M12	M10
3“	60.0	1LA030-060	2600	93	2	39.2	M12	M10
3,5“	30.0	1LA040-099	2000	114	2	27.5	M12	M10
3,5“	40.0	1LA040-099	2000	114	2	27.5	M12	M10
3,5“	50.0	1LA040-099	2000	114	2	27.5	M12	M10
3,5“	60.0	1LA040-099	2000	114	2	27.5	M12	M10
3,5“	30.0	1LA040-100	3000	102	4	27.5	M12	M10
3,5“	40.0	1LA040-100	3000	102	4	27.5	M12	M10
3,5“	50.0	1LA040-100	3000	102	4	27.5	M12	M10
3,5“	60.0	1LA040-100	3000	102	4	27.5	M12	M10

AL-T-Expansion-Bus-Support-Coupler

Tube-Flat Terminal

Dim. of Cond	Code	Technical Dates of Connector											
		B	Bolt dim.	Baseplate							Currentbridge		
				Dimension			Drillingplan				ØG		Max. Curr.
ØA			ØA	ØC	ØD	E	Pcs.	ØF	±α	β	Pcs.	Max.	
80	1KC105-040	100	M10	100	100	35					2	39.2	2650
80	1KC105-045	100	M10	100	200	25					2	39.2	2650
80	1KC100-080	100	M10	200	100	35					2	44.8	3100
120	1KC100-120	130	M10	225	260	30	8	18			2	44.8	3100
200	1KC100-200	170	M12	225	260	30	8	18			4	44.8	6200
250	1KC100-250	220	M12	200	100	25					4	39.2	5300
8“	1KC100-220	190	M12	225	260	30	8	18			4	44.8	6200

Figur 1

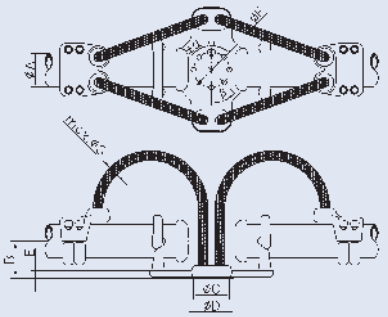

Figur 2

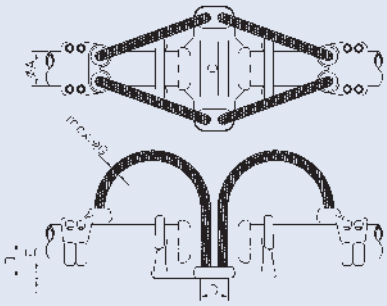

AL-T-Expansion-Bus-Support-Coupler

Tube (sliding)-Flat Terminal

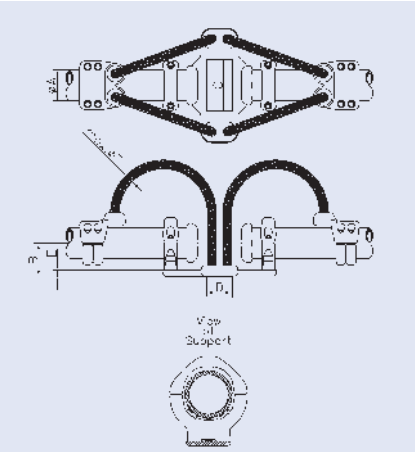

Dim. of Cond	Code	Technical Dates of Connector							
		B	Bolt dim.	Flat Terminal			Currentbridge		
				Dimension			ØF		Max. Curr.
ØA			ØA	ØC	ØD	E	Pcs.	Max.	
120	1KC105-120	130	M10	100	100	35	2	44.8	3150
160	1KC105-165	150	M12	200	100	25	2	44.8	3150
200	1KC105-200	150	M12	100	100	16	4	44.8	3150
200	1KC100-222	180	M12	200	100	25	2	44.8	3150

AL-T-Expansion-Flat Terminal

Tube-Flat Terminal

Dimension of Conductor			Code	Technical Dates of Connector					
				Max. Current	E	F	Currentbridge ØG		Bolt Dim.
ØA	C	D					Pcs.	Max.	ØA
140	75	75	1MB040-141	2500	35	215	2	34.4	M12
160	100	100	1MB040-161	3200	70	215	2	44.8	M12
200	100	100	1MB040-211	1300	12		2	44.8	M12
5"	75	75	1MB040-141	2500	35	215	2	34.4	M12

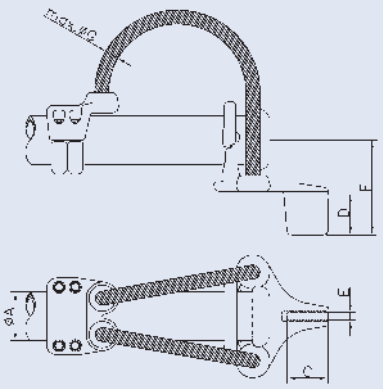

AL-90°-Expansion-Bus-Support-Coupler

Tube-Tube

Dim. of Cond	Code	Technical Dates of Connector											
		B	Bolt dim.	Baseplate							Currentbridge		Max. Curr.
				Dimension			Drillingplan				ØF		
ØA			ØA	ØC	ØD	E	Pcs.	ØF	±α	β	Pcs.	Max.	
120	1KB200-090	130	M10	120	145	10	8	14	5°		2	44.8	3000
120	1KB198-120	130	M10	120	160	10	8	18	5°		2	44.8	3000
120	1KB200-093	130	M10	127	160	10	8	14			2	44.8	3000
120	1KB198-091	130	M10	127	160	10	8	18	5°		2	44.8	3000
120	1KB200-089	130	M10	225	260	12	4	18	5°	45°	2	44.8	3000
150	1KB198-150	150	M10	225	260	15	8	18			4	44.8	4500
160	1KB198-159	155	M10	127	160	15	8	18			2	44.8	3200
160	1KB198-160	155	M10	225	260	15	8	18			2	44.8	3200
250	1KB198-252	225	M12	127	160	15	8	18			2	44.8	3200
250	1KB198-250	225	M12	225	260	15	8	18			4	44.8	6200

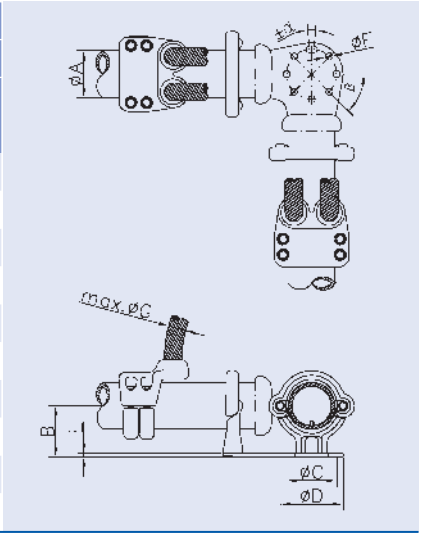

AL-90°-Expansion-Bus-Support-Coupler

Tube-Tube

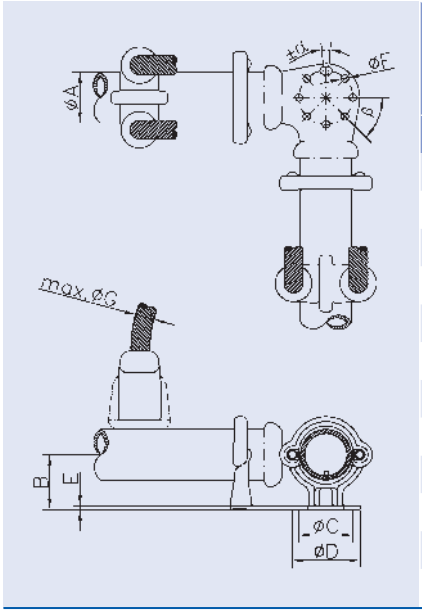

Dim. of Cond	Code	Technical Dates of Connector												
		B	Bolt dim.	Baseplate							Currentbridge			
				Dimension			Drillingplan				ØF		Max. Curr.
ØA			ØA	ØC	ØD	E	Pcs.	ØF	±α	β	Pcs.	Max.	
120	1KB105-120	130	M10	127	160	12	8	18			2	44.8	3200
160	1KB105-161	150	M12	127	160	12	8	18			2	44.8	3200
160	1KB105-162	150	M10	225	260	15	8	18			4	34.4	4500
200	1KB105-200	175	M12	225	260	15	8	18			4	34.4	4500
120	1KB105-120	130	M10	127	160	12	8	18			2	44.8	3200
160	1KB105-161	150	M12	127	160	12	8	18			2	44.8	3200
160	1KB105-162	150	M10	225	260	15	8	18			4	34.4	4500
200	1KB105-200	175	M12	225	260	15	8	18			4	34.4	4500

AL-90°-Expansion-Flat Terminal

Tube-Flat Terminal

Dimension of Conductor			Code	Technical Dates of Connector					
				Max. Current	E	F	Currentbridge ØG		Bolt Dim.
ØA	C	D					Pcs.	Max.	ØA
100	125	125	1MB030-116	3200	25	255	4	34.4	M12
120	100	100	1MB030-121	3000	30	239	2	44.8	M12
120	200	100	1MB030-125	3000	20	260	2	44.8	M12
120	200	100	1MB030-126	3000	25	270	4	34.4	M12
140	200	100	1MB030-142	3200	30	246	2	44.8	M12
160	80	80	1MB030-164	2000	25	225	4	44.8	M12
160	100	100	1MB030-160	3200	30	234	2	44.8	M12
250	120	100	1MB030-250	3200	30	310	2	44.8	M12
3,5“	125	125	1MB030-116	3200	25	255	4	34.4	M12
4“	100	100	1MB030-114	3200	30	239	2	44.8	M12
5“	200	100	1MB030-142	3200	30	246	2	44.8	M12

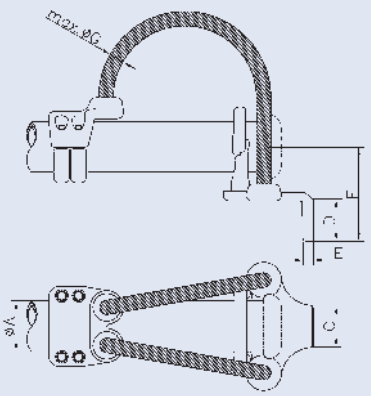

AL-90°-Expansion-Flat Terminal

Tube-Flat Terminal (straight)

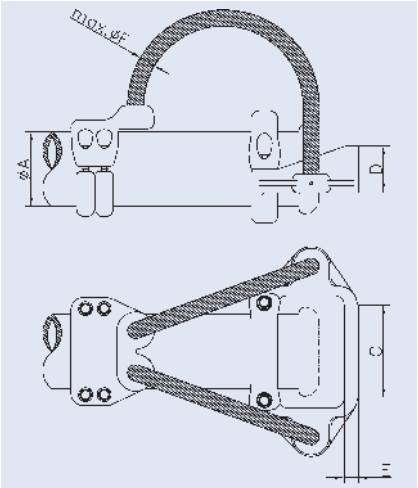

Dimension of Conductor			Code	Technical Dates of Connector				
				Max. Current	E	Currentbridge ØF		Bolt Dim.
ØA	C	D				Pcs.	Max.	ØA
80	200	100	1MD020-100	2700	18	2	39.2	M12
120	200	100	1MD020-109	2700	18	2	39.2	M12
160	125	125	1MD020-166	3200	30	2	44.8	M12
160	200	100	1MD020-167	3200	20	2	44.8	M12
160	200	100	1MD020-163	4000	30	4	34.4	M12
250	200	100	1MD020-250	4000	25	4	39.2	M12
250	220	128	1MD020-251	3200	25	2	44.8	M12
2,5“	200	100	1MD020-100	2700	18	2	39.2	M12
4“	200	100	1MD020-109	2700	18	2	39.2	M12

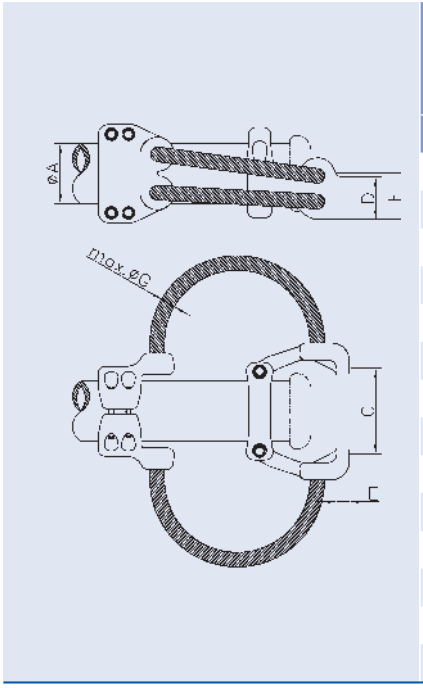

Dimension of Conductor			Code	Technical Dates of Connector					
				Max. Current	E	F	Currentbridge ØG		Bolt Dim.
ØA	C	D					Pcs.	Max.	ØA
80	200	100	1MD050-083	2400	25		2	44.8	M12
120	200	100	1MD050-120	3000	25		2	44.8	M12
140	200	100	1MD050-142	4000	25		4	44.8	M12
140	200	100	1MD050-141	4000	30	105	4	44.8	M12
150	200	100	1MD050-141	4000	30	105	4	44.8	M12
160	200	100	1MD050-161	5000	25		4	44.8	M12
160	200	100	1MD050-141	5000	30	105	4	44.8	M12
200	200	100	1MD050-190	6000	25		4	44.8	M12
2,5“	200	100	1MD050-083	2400	25		2	44.8	M12
4“	200	100	1MD050-120	3000	25		2	44.8	M12
4,5“	200	100	1MD050-120	3000	25		2	44.8	M12
5“	200	100	1MD050-142	4000	25		4	44.8	M12
5“	200	100	1MD050-141	4000	30	105	4	44.8	M12
8“	200	100	1MD050-220	6200	25		4	44.8	M12

AL-90°-Expansion-Connector

Tube-Stud

Dimension of Conductor		Code	Technical Dates of Connector						
			Max. Current	C	D	Currentbridge ØE		Bolt Dimension	
ØA	ØB					Pcs.	Max.	ØA	ØB
100.0	30.0	1LB020-127	2000	107	210	2	39.2	M12	M10
100.0	40.0	1LB020-127	2000	107	210	2	39.2	M12	M10
120.0	30.0	1LB020-144	2000	107	200	2	34.4	M12	M10
120.0	40.0	1LB020-144	2000	107	200	2	34.4	M12	M10
120.0	50.0	1LB020-130	3000	102	212	2	44.8	M12	M10
120.0	60.0	1LB020-130	3000	102	212	2	44.8	M12	M10
140.0	30.0	1LB020-143	3000	102	240	2	44.8	M12	M12
140.0	30.0	1LB020-142	3000	102	248	2	44.8	M12	M12
140.0	40.0	1LB020-143	3000	102	240	2	44.8	M12	M12
140.0	40.0	1LB020-142	3000	102	248	2	44.8	M12	M12
140.0	40.0	1LB020-141	3200	142	330	4	39.2	M12	M12
140.0	50.0	1LB020-143	3000	102	240	2	44.8	M12	M12
140.0	50.0	1LB020-142	3000	102	248	2	44.8	M12	M12
140.0	50.0	1LB020-141	3200	142	330	4	39.2	M12	M12
140.0	60.0	1LB020-143	3000	102	240	2	44.8	M12	M12
140.0	60.0	1LB020-142	3000	102	248	2	44.8	M12	M12
140.0	60.0	1LB020-141	3200	142	330	4	39.2	M12	M12
160.0	30.0	1LB020-160	3000	102	260	2	44.8	M12	M12
160.0	30.0	1LB020-161	3000	102	260	4	44.8	M12	M12
160.0	30.0	1LB020-174	3000	102	293	2	44.8	M12	M12
160.0	40.0	1LB020-160	3000	102	260	2	44.8	M12	M12
160.0	40.0	1LB020-161	3000	102	260	4	44.8	M12	M12
160.0	40.0	1LB020-174	3000	102	293	2	44.8	M12	M12
160.0	50.0	1LB020-160	3000	102	260	2	44.8	M12	M12
160.0	50.0	1LB020-161	3000	102	260	4	44.8	M12	M12
160.0	50.0	1LB020-174	3000	102	293	2	44.8	M12	M12
160.0	60.0	1LB020-160	3000	102	260	2	44.8	M12	M12
160.0	60.0	1LB020-161	3000	102	260	4	44.8	M12	M12
160.0	60.0	1LB020-174	3000	102	293	2	44.8	M12	M12
200.0	30.0	1LB020-202	3000	102	260	2	44.8	M12	M12
200.0	30.0	1LB020-204	3000	102	260	4	39.2	M12	M12
200.0	40.0	1LB020-202	3000	102	260	2	44.8	M12	M12
200.0	40.0	1LB020-204	3000	102	260	4	39.2	M12	M12
200.0	50.0	1LB020-202	3000	102	260	2	44.8	M12	M12
200.0	50.0	1LB020-204	3000	102	260	4	39.2	M12	M12
200.0	60.0	1LB020-202	3000	102	260	2	44.8	M12	M12

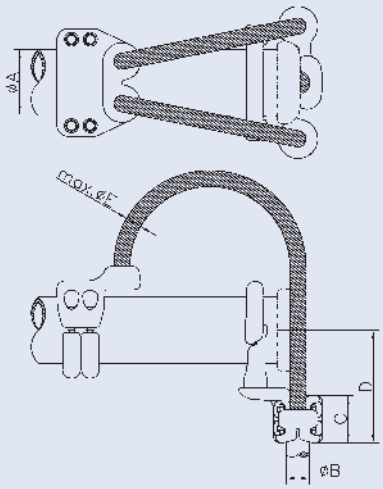

AL-90°-Expansion-Connector

Tube-Stud

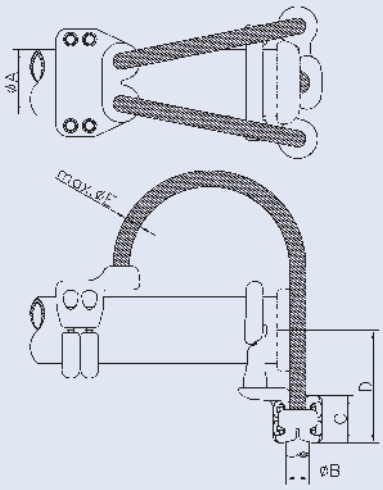

Dimension of Conductor		Code	Technical Dates of Connector						
			Max. Current	C	D	Currentbridge ØE		Bolt Dimension	
ØA	ØB					Pcs.	Max.	ØA	ØB
200.0	60.0	1LB020-204	3000	102	260	4	39.2	M12	M12
250.0	30.0	1LB020-209	3000	102	400	2	44.8	M12	M12
250.0	40.0	1LB020-209	3000	102	400	2	44.8	M12	M12
250.0	50.0	1LB020-209	3000	102	400	2	44.8	M12	M12
250.0	60.0	1LB020-209	3000	102	400	2	44.8	M12	M12
3,5“	30.0	1LB020-127	2000	107	210	2	39.2	M12	M10
3,5“	40.0	1LB020-127	2000	107	210	2	39.2	M12	M10
5“	30.0	1LB020-143	3000	102	240	2	44.8	M12	M12
5“	30.0	1LB020-142	3000	102	248	2	44.8	M12	M12
5“	40.0	1LB020-143	3000	102	240	2	44.8	M12	M12
5“	40.0	1LB020-142	3000	102	248	2	44.8	M12	M12
5“	40.0	1LB020-141	3200	142	330	4	39.2	M12	M12
5“	50.0	1LB020-143	3000	102	240	2	44.8	M12	M12
5“	50.0	1LB020-142	3000	102	248	2	44.8	M12	M12
5“	50.0	1LB020-141	3200	142	330	4	39.2	M12	M12
5“	60.0	1LB020-143	3000	102	240	2	44.8	M12	M12
5“	60.0	1LB020-142	3000	102	248	2	44.8	M12	M12
5“	60.0	1LB020-141	3200	142	330	4	39.2	M12	M12

AL-Angle-Expansion-Bus-Support-Coupler

Tube-Tube

Dim. of Cond	Code	Technical Dates of Connector												
		B	α	Bolt dim.	Baseplate							Currentbridge		
					Dimension			Drillingplan				ØG		Max. Curr.
ØA				ØA	ØC	ØD	E	Pcs.	ØF	±β	γ	Pc.	Max.	
120	1KB050-067	130	45°	M12	225	260	12	8	18	5°		2	44.8	3200
160	1KB050-075	150	45°	M12	225	260	12	8	18	5°		2	44.8	3200
200	1KB050-200	180	24°	M12	120	145	16	8	14	5°		2	44.8	3200
200	1KB050-202	200	70°	M12	225	260	15	8	18	5°		4	44.8	6000
250	1KB050-251	225	45°	M12	127	160	15	8	18			2	44.8	3200
250	1KB050-252	225	60°	M12	127	160	15	8	18			2	44.8	3200
3“	1KB050-066	100	45°	M10	127	160	10	8	18			2	34.4	2250
4“	1KB050-120	130	45°	M12	225	260	12	8	18	5°		2	44.8	3200
4,5“	1KB050-120	130	45°	M12	225	260	12	8	18	5°		2	44.8	3200

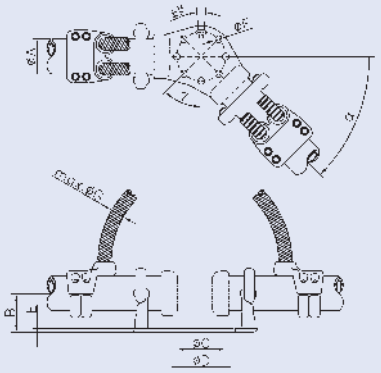

AL-Bus Support

Tube

Dim. of Cond.	Code	Technical Dates of Connector								
		B	Bolt Dim.	Baseplate						
				Dimension			Drillingplan			
ØA			ØA	ØC	ØD	E	Pcs.	ØF	±α	β
80	1JB010-385	100	M10	127	160	10	8	18		
100	1JB008-102	100	M10	76	110	10	4	14		
100	1JB008-103	100	M10	76	110	10	8	14		
100	1JB008-100	100	M10	127	160	10	8	18	5°	
100	1JB010-401	105	M10	127	160	10	4	18	5°	45°
100	1JB008-101	130	M10	127	160	10	8	18		
100	1JB010-400	120	M10	225	260	10	4	18	5°	45°
120	1JB008-119	130	M10	76	110	12	8	14		
120	1JB008-128	130	M10	76	110	10	4	18		45°
120	1JB008-117	90	M10	120	145	10	8	14	5°	
120	1JB008-118	130	M10	120	145	10	8	14	5°	
120	1JB008-124	145	M10	120	145	10	8	14	5°	
120	1JB010-489	120	M10	127	160	10	4	18		45°
120	1JB008-126	125	M10	127	160	10	8	18		
120	1JB008-127	130	M10	127	160	10	8	14		
120	1JB008-095	130	M10	127	160	10	8	18	5°	
120	1JB008-145	145	M10	127	160	10	8	18		
120	1JB008-125	160	M10	127	160	10	4	18		45°
120	1JB008-122	180	M10	127	160	10	8	18		
120	1JB008-120	130	M10	225	260	10	8	18	5°	
150	1JB008-153	150	M10	76	100	12	4	14		45°
150	1JB008-151	150	M10	127	160	10	4	18		
150	1JB008-156	150	M10	127	160	12	4	18	5°	45°
150	1JB008-150	150	M10	225	260	10	4	18	5°	45°
160	1JB008-163	150	M10	76	110	12	4	14		45°
160	1JB008-168	150	M10	120	145	12	4	14		45°
160	1JB008-161	150	M10	127	160	12	4	18		45°
160	1JB008-160	150	M10	127	160	12	4	18	5°	45°
160	1JB008-166	150	M10	127	160	12	8	18		
160	1JB008-159	150	M10	127	160	12	8	18	5°	
160	1JB008-162	155	M10	127	160	12	4	18	5°	45°
160	1JB008-164	150	M10	225	260	12	8	18	5°	
160	1JB010-346	155	M10	225	260	12	8	18	5°	
200	1JB008-207	175	M12	120	145	10	4	14	5°	45°
200	1JB008-205	180	M12	120	145	10	4	14	5°	45°
200	1JB008-202	170	M12	127	160	12	8	18		

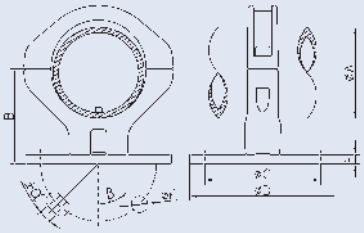

AL-Bus-Support

Tube

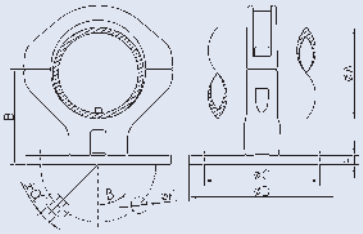

Dim. of Cond.	Code	Technical Dates of Connector								
		B	Bolt Dim.	Baseplate						
				Dimension			Drillingplan			
ØA			ØA	ØC	ØD	E	Pcs.	ØF	±α	β
200	1JB008-203	170	M12	127	160	10	8	18	5°	
200	1JB008-204	175	M12	127	160	15	4	18		45°
200	1JB010-620	190	M12	127	160	15	4	18		45°
200	1JB008-208	170	M12	225	260	12	8	18		
250	1JB008-250	225	M12	127	160	15	4	18	5°	45°
250	1JB008-251	225	M12	225	260	15	8	18		
3″	1JB008-089	100	M10	76	100	10	4	14		45°
3″	1JB008-090	90	M10	127	160	10	8	18	5°	
3″	1JB008-091	100	M10	127	160	10	4	18	5°	
3,5″	1JB008-102	100	M10	76	110	10	4	14		
3,5″	1JB008-103	100	M10	76	110	10	8	14		
3,5″	1JB008-100	100	M10	127	160	10	8	18	5°	
3,5″	1JB010-401	105	M10	127	160	10	4	18	5°	45°
3,5″	1JB008-101	130	M10	127	160	10	8	18		
3,5″	1JB010-400	120	M10	225	260	10	4	18	5°	45°
4″	1JB008-112	120	M10	127	160	10	4	18		45°
4″	1JB008-116	130	M10	127	160	10	8	18	5°	
4″	1JB008-108	150	M10	127	160	10	8	18		
4″	1JB008-114	120	M10	225	260	10	4	18		45°
4″	1JB008-113	150	M10	225	260	12	8	18		
4,5″	1JB008-130	125	M10	127	160	10	8	18		
4,5″	1JB008-131	140	M10	127	160	10	8	18		
5″	1JB008-138	140	M10	76	100	12	4	14		45°
5″	1JB008-141	140	M10	127	160	10	4	18		
5″	1JB008-140	140	M10	127	160	10	8	18	5°	
5″	1JB008-115	140	M10	178	215	12	4	22		
6″	1JB008-169	150	M10	127	160	12	8	18		
6″	1JB008-174	150	M10	225	260	12	8	18	5°	
8″	1JB008-221	180	M12	225	260	12	8	18		

AL-Bus Support

Tube (sliding)

Dim. of Cond.	Code	Technical Dates of Connector								
		B	Bolt Dim.	Baseplate						
				Dimension			Drillingplan			
ØA			ØA	ØC	ØD	E	Pcs.	ØF	±α	β
100	1JB100-043	120	M10	120	145	10	8	14	5°	
100	1JB100-040	120	M10	127	160	10	4	18		45°
120	1JB100-127	125	M10	127	160	15	4	18		45°
120	1JB100-115	125	M10	127	160	12	4	18	5°	45°
120	1JB100-116	130	M10	127	160	10	4	18		45°
120	1JB100-120	130	M10	225	260	10	8	18		
150	1JB100-150	150	M12	76	100	15	4	14		45°
160	1JB100-158	150	M12	120	145	10	4	14	5°	45°
160	1JB100-156	140	M12	127	160	10	4	14	5°	45°
160	1JB100-044	150	M12	127	160	10	4	18		45°
160	1JB100-171	150	M12	225	260	10	8	18		
200	1JB100-047	150	M12	120	145	12	4	14		45°
200	1JB100-051	175	M12	120	145	12	4	14		45°
200	1JB100-320	190	M12	127	160	15	4	18		45°
200	1JB100-050	175	M12	225	260	12	8	18		
200	1JB100-255	225	M12	127	160	15	4	18		45°
300	1JB100-350	326	M12	127	160	15	4	18		
3,5“	1JB100-043	120	M10	120	145	10	8	14	5°	
3,5“	1JB100-040	120	M10	127	160	10	4	18		45°
8“	1JB100-220	180	M12	225	260	15	8	18		

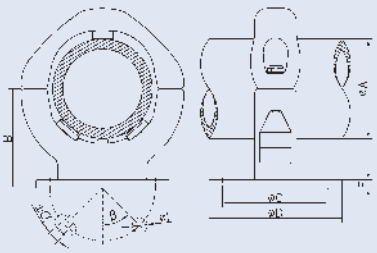

AL-Bus-Support

Tube (roller bearing)

Figur 1

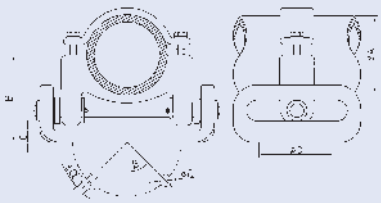

Figur 2

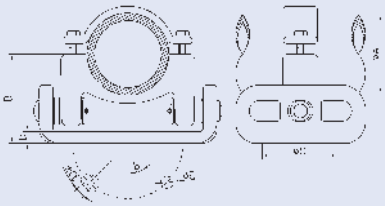

Dim. of Cond.	Code	Technical Dates of Connector								
		B	Bolt Dim.	Baseplate						Figur
				Dimension		Drillingplan				
ØA			ØA	ØC	D	Pcs.	ØE	±α	β	
80	1JB305-080	120	M12	120	10	4	14	5°	45°	1
80	1JB305-081	120	M12	120	10	4	14	5°	45°	2
100	1JB305-080	120	M12	120	10	4	14	5°	45°	1
100	1JB305-081	120	M12	120	10	4	14	5°	45°	2
100	1JB305-101	120	M12	127	10	4	18	5°	45°	1
120	1JB305-120	130	M10	127	10	4	18	5°	45°	1
160	1JB305-160	150	M10	225	10	4	18	5°	45°	1
160	1JB305-161	150	M10	225	10	4	18	5°	45°	2
200	1JB305-200	175	M10	120	10	4	14	5°	45°	1
200	1JB305-201	175	M10	120	10	4	14	5°	45°	2
250	1JB305-252	200	M10	120	10	4	14	5°	45°	1
250	1JB305-253	200	M10	120	10	4	14	5°	45°	2
250	1JB305-249	200	M10	127	10	4	18	5°	45°	1
250	1JB305-250	200	M10	225	10	4	18	5°	45°	1
250	1JB305-251	200	M10	225	10	4	18	5°	45°	2
2,5“	1JB305-080	120	M12	120	10	4	14	5°	45°	1
2,5“	1JB305-081	120	M12	120	10	4	14	5°	45°	2
3“	1JB305-080	120	M12	120	10	4	14	5°	45°	1
3“	1JB305-081	120	M12	120	10	4	14	5°	45°	2
3,5“	1JB305-080	120	M12	120	10	4	14	5°	45°	1
3,5“	1JB305-081	120	M12	120	10	4	14	5°	45°	2
3,5“	1JB305-101	120	M12	127	10	4	18	5°	45°	1
8“	1JB305-220	190	M10	225	10	4	18	5°	45°	1
8“	1JB305-221	190	M10	225	10	4	18	5°	45°	2

AL-Bus Support

Tube (fixed with caps)

Dim. of Cond.	Code	Technical Dates of Connector								
		B	Bolt Dim.	Baseplate						
				Dimension			Drillingplan			
ØA			ØA	ØC	ØD	E	Pcs.	ØF	±α	β
140	1JB810-140	140	M12	127	160	12	4	18		45°
140	1JB810-141	140	M12	225	260	12	8	18	5°	
150	1JB810-140	140	M12	127	160	12	4	18		45°
150	1JB810-141	140	M12	225	260	12	8	18	5°	
160	1JB810-140	140	M12	127	160	12	4	18		45°
160	1JB810-141	140	M12	225	260	12	8	18	5°	
250	1JB810-250	225	M12	127	160	15	4	18		45°
5“	1JB810-140	140	M12	127	160	12	4	18		45°
5“	1JB810-141	140	M12	225	260	12	8	18	5°	
8“	1JB810-220	328	M12	225	260	15	8	18		

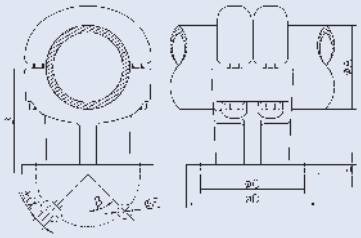

AL-Bus-Support

Tube (90°-baseplate)

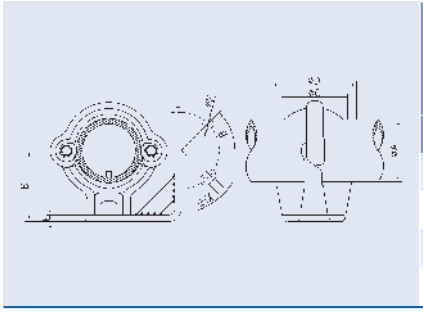

Dim. of Cond.	Code	Technical Dates of Connector								
		B	Bolt Dim.	Baseplate						
				Dimension			Drillingplan			
ØA			ØA	ØC	ØD	E	Pcs.	ØF	±α	β
120	1JC320-123	130	M10	127	160	12	4	18		45°
160	1JC320-165	150	M12	76	100	12	4	14		
160	1JC320-161	160	M12	127	160	12	8	18		
8″	1JC320-225	179	M12	225	260	15	4	18		45°

AL-Bus-Support

Tube-Tube

Dim. of Cond.	Code	Technical Dates of Connector									
		B	C	Bolt Dim.	Baseplate						
					Dimension			Drillingplan			
ØA				ØA	ØD	ØE	F	Pcs.	ØG	±α	β
120	1JJ008-122	130	320	M10	120	145	10	8	14	5°	
120	1JJ008-120	120	320	M10	127	160	12	8	18	5°	
120	1JJ010-055	130	320	M10	225	260	12	8	18	5°	
150	1JJ008-152	150	240	M10	76	100	12	4	14		45°
150	1JJ008-150	150	240	M10	127	160	12	8	18	5°	
160	1JJ010-160	155	320	M12	127	160	12	8	18	5°	
160	1JJ008-161	150	400	M10	225	260	12	4	26		45°
160	1JJ008-162	150	400	M10	225	260	12	4	18	5°	45°
200	1JJ008-200	170	440	M12	127	160	15	8	18		
200	1JJ010-206	190	448	M12	127	160	15	8	18	5°	
250	1JJ010-263	225	480	M12	127	160	16	8	18	5°	
250	1JJ010-258	225	400	M12	225	260	15	8	18		
250	1JJ010-259	225	400	M12	225	260	15	8	18	5°	

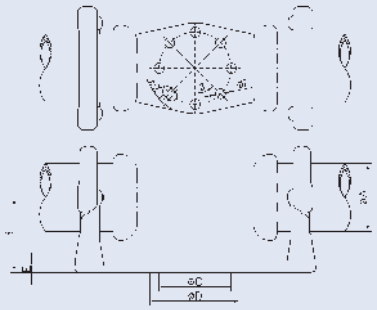

AL-Bus-Support

Tube-Tube (roller bearing)

Figur 1

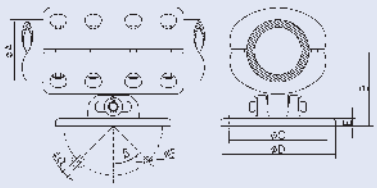

Figur 2

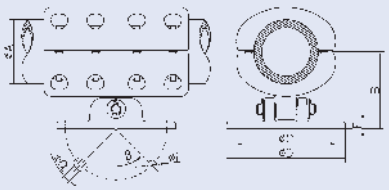

Dim. of Cond.	Code	Technical Dates of Connector									
		B	Bolt Dim.	Baseplate							Figur
				Dimension			Drillingplan				
ØA			ØA	ØC	ØD	E	Pcs.	ØF	±α	β	
120	1JJ280-125	150	M12	127	160	15	4	17			1
120	1JJ280-126	150	M12	127	160	15	4	17			2
120	1JJ280-123	150	M12	127	160	15	4	18	5°		1
120	1JJ280-124	160	M12	127	160	15	4	15			1
120	1JJ280-122	160	M12	127	160	15	4	18	5°		1
140	1JJ280-144	140	M12	127	160	15	4	18		45°	1
140	1JJ280-143	140	M12	127	160	15	4	18		45°	2
150	1JJ280-144	140	M12	127	160	15	4	18		45°	1
150	1JJ280-143	140	M12	127	160	15	4	18		45°	2
160	1JJ280-144	140	M12	127	160	15	4	18		45°	1
160	1JJ280-143	140	M12	127	160	15	4	18		45°	2
250	1JJ280-250	200	M12	127	160	15	4	18		45°	2
250	1JJ280-251	225	M12	225	260	15	4	18		45°	
3“	1JJ280-090	140	M12	127	160	10	4	12			1
4“	1JJ280-125	150	M12	127	160	15	4	17			1
4“	1JJ280-126	150	M12	127	160	15	4	17			2
4“	1JJ280-123	150	M12	127	160	15	4	18	5°		1
4“	1JJ280-124	160	M12	127	160	15	4	15			1
4“	1JJ280-122	160	M12	127	160	15	4	18	5°		1
4,5“	1JJ280-125	150	M12	127	160	15	4	17			1
4,5“	1JJ280-126	150	M12	127	160	15	4	17			2
4,5“	1JJ280-123	150	M12	127	160	15	4	18	5°		1
4,5“	1JJ280-124	160	M12	127	160	15	4	15			1
4,5“	1JJ280-122	160	M12	127	160	15	4	18	5°		1
5“	1JJ280-144	140	M12	127	160	15	4	18		45°	1
5“	1JJ280-143	140	M12	127	160	15	4	18		45°	2

AL-Bus Support

Tube-Tube (fixed with Caps)

Dim. of Cond.	Code	Technical Dates of Connector										
		Max. Curr.	B	Baseplate							G	Bolt Dim.
				Dimension			Drillingplan					
ØA				ØC	ØD	E	Pcs.	ØF	±α	β		ØA
63	1JJ820-121	2200	90	120	160	20	4	14	5°	45°	99	M10
80	1JJ820-150	2400	100	76	160	20	4	14			90	M12
80	1JJ820-160	2400	100	120	160	20	4	14		45°	90	M12
80	1JJ820-130	2400	80	127	160	15	4	18	5°	45°	90	M12
80	1JJ820-170	2400	100	127	160	20	8	18	5°	45°	90	M12
100	1JJ820-204	2600	100	66	160	25	4	12		45°	96	M12
100	1JJ820-180	2600	100	76	160	25	4	14		45°	96	M12
100	1JJ820-205	2600	120	76	160	25	4	14		45°	96	M12
100	1JJ820-201	2600	100	120	160	25	4	14	5°	45°	96	M12
100	1JJ820-190	2600	90	127	160	15	8	18	5°		96	M12
100	1JJ820-200	2600	100	127	160	25	4	18	5°	45°	96	M12
100	1JJ820-221	2600	100	127	160	25	8	18	5°		96	M12
120	1JJ820-254	3000	130	120	160	25	4	14	5°	45°	91	M12
120	1JJ820-260	3000	130	127	160	25	4	18		45°	97	M12
120	1JJ820-264	3000	130	127	160	25	4	18	5°	45°	97	M12
120	1JJ820-238	3000	130	127	160	25	8	18			97	M12
120	1JJ820-268	3000	145	127	160	40	8	18			97	M12
120	1JJ820-244	3000	150	127	160	25	8	18	5°		90	M12
140	1JJ820-289	4000	140	127	160	25	4	18	5°		117	M12
140	1JJ820-288	4000	140	127	160	25	4	18	5°	45°	117	M12
140	1JJ820-302	4000	140	225	260	25	8	18			117	M12
140	1JJ820-306	4000	145	225	260	25	8	18			117	M12
140	1JJ820-303	4000	155	225	260	40	8	18			117	M12
150	1JJ820-289	4000	140	127	160	25	4	18	5°		117	M12
150	1JJ820-288	4000	140	127	160	25	4	18	5°	45°	117	M12
150	1JJ820-302	4000	140	225	260	25	8	18			117	M12
150	1JJ820-306	4000	145	225	260	25	8	18			117	M12
150	1JJ820-303	4000	155	225	260	40	8	18			117	M12
160	1JJ820-289	4000	140	127	160	25	4	18	5°		117	M12
160	1JJ820-288	4000	140	127	160	25	4	18	5°	45°	117	M12
160	1JJ820-302	4000	140	225	260	25	8	18			117	M12
160	1JJ820-306	4000	145	225	260	25	8	18			117	M12
160	1JJ820-303	4000	155	225	260	40	8	18			117	M12
200	1JJ820-501	4000	175	127	160	25	8	18	5°		96	M12
200	1JJ820-500	4000	190	127	160	25	8	18	5°		96	M12
2“	1JJ820-121	2200	90	120	160	20	4	14	5°	45°	99	M10

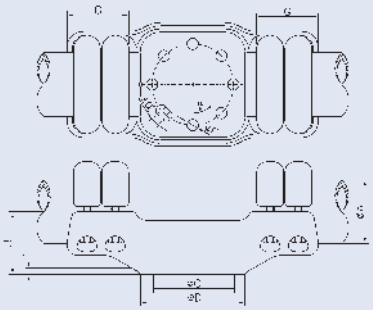

AL-Bus-Support

Tube-Tube (fixed with Caps)

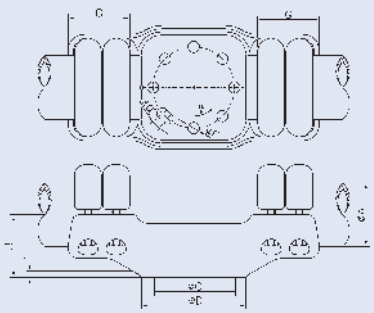

Dim. of Cond.	Code	Technical Dates of Connector										
		Max. Curr.	B	Baseplate							G	Bolt Dim.
				Dimension			Drillingplan					
ØA				ØC	ØD	E	Pcs.	ØF	±α	β		ØA
2,5“	1JJ820-150	2400	100	76	160	20	4	14			90	M12
2,5“	1JJ820-160	2400	100	120	160	20	4	14		45°	90	M12
2,5“	1JJ820-130	2400	80	127	160	15	4	18	5°	45°	90	M12
2,5“	1JJ820-170	2400	100	127	160	20	8	18	5°	45°	90	M12
3,5“	1JJ820-204	2600	100	66	160	25	4	12		45°	96	M12
3,5“	1JJ820-180	2600	100	76	160	25	4	14		45°	96	M12
3,5“	1JJ820-205	2600	120	76	160	25	4	14		45°	96	M12
3,5“	1JJ820-201	2600	100	120	160	25	4	14	5°	45°	96	M12
3,5“	1JJ820-190	2600	90	127	160	15	8	18	5°		96	M12
3,5“	1JJ820-200	2600	100	127	160	25	4	18	5°	45°	96	M12
3,5“	1JJ820-221	2600	100	127	160	25	8	18	5°		96	M12
4“	1JJ820-254	3000	130	120	160	25	4	14	5°	45°	91	M12
4“	1JJ820-260	3000	130	127	160	25	4	18		45°	97	M12
4“	1JJ820-264	3000	130	127	160	25	4	18	5°	45°	97	M12
4“	1JJ820-238	3000	130	127	160	25	8	18			97	M12
4“	1JJ820-268	3000	145	127	160	40	8	18			97	M12
4“	1JJ820-244	3000	150	127	160	25	8	18	5°		90	M12
4,5“	1JJ820-254	3000	130	120	160	25	4	14	5°	45°	91	M12
4,5“	1JJ820-260	3000	130	127	160	25	4	18		45°	97	M12
4,5“	1JJ820-264	3000	130	127	160	25	4	18	5°	45°	97	M12
4,5“	1JJ820-238	3000	130	127	160	25	8	18			97	M12
4,5“	1JJ820-268	3000	145	127	160	40	8	18			97	M12
4,5“	1JJ820-244	3000	150	127	160	25	8	18	5°		90	M12
5“	1JJ820-289	4000	140	127	160	25	4	18	5°		117	M12
5“	1JJ820-288	4000	140	127	160	25	4	18	5°	45°	117	M12
5“	1JJ820-302	4000	140	225	260	25	8	18			117	M12
5“	1JJ820-306	4000	145	225	260	25	8	18			117	M12
5“	1JJ820-303	4000	155	225	260	40	8	18			117	M12

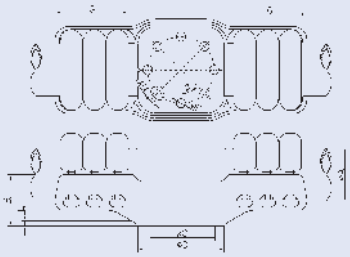

80	1JJ820-141	2500	100	76	160	20	4	14			130	M12
80	1JJ820-175	2500	100	120	160	20	4	14		45°	130	M12
100	1JJ820-206	3200	100	76	160	20	4	14		45°	142	M12
100	1JJ820-240	3600	120	127	160	25	8	18			142	M12
120	1JJ820-267	4000	115	127	160	25	8	18	5°		130	M12
120	1JJ820-270	4000	130	127	160	25	8	18	5°		130	M12
120	1JJ820-263	3600	150	127	160	25	8	18	13°		130	M12

AL-Bus Support

Tube-Tube (fixed with Caps)

Dim. of Cond.	Code	Technical Dates of Connector										
		Max. Curr.	B	Baseplate							G	Bolt Dim.
				Dimension			Drillingplan					
ØA				ØC	ØD	E	Pcs.	ØF	±α	β		ØA
120	1JJ820-261	4000	150	127	160	25	8	18			130	M12
120	1JJ820-269	4000	115	225	260	20	8	18	5°		130	M12
120	1JJ820-276	4000	130	225	260	35	8	18	5°		130	M12
140	1JJ820-291	5000	140	178	215	20	8	18	5°		130	M12
150	1JJ820-291	5000	140	178	215	20	8	18	5°		130	M12
160	1JJ820-291	5000	140	178	215	20	8	18	5°		130	M12
2,5“	1JJ820-141	2500	100	76	160	20	4	14			130	M12
2,5“	1JJ820-175	2500	100	120	160	20	4	14		45°	130	M12
3,5“	1JJ820-206	3200	100	76	160	20	4	14		45°	142	M12
3,5“	1JJ820-240	3600	120	127	160	25	8	18			142	M12
4“	1JJ820-267	4000	115	127	160	25	8	18	5°		130	M12
4“	1JJ820-270	4000	130	127	160	25	8	18	5°		130	M12
4“	1JJ820-263	3600	150	127	160	25	8	18	13°		130	M12
4“	1JJ820-261	4000	150	127	160	25	8	18			130	M12
4“	1JJ820-269	4000	115	225	260	20	8	18	5°		130	M12
4“	1JJ820-276	4000	130	225	260	35	8	18	5°		130	M12

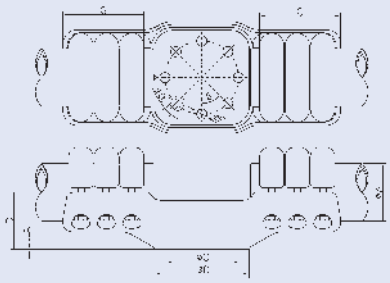

AL-Disconnector-Countercontact

Tube-Countercontact

Dim. of Cond.		Code	Technical Dates of Connector								
ØA	ØB		Max. Curr.	C	D	E	F	G	Fig	Bolt Dim. ØA	Type of Rope ØB
80	32.2	1NJ100-080J	2080	115	716	200	932		1	M12	Al/St 560/50
100	32.2	1NJ100-105J	2080	135	551	200	770		1	M12	Al/St 560/50
100	32.2	1NJ100-100J	2080	135	611	180	953		1	M12	Al/St 560/50
100	32.2	1NJ100-102J	2080	135	631	180	970		1	M12	Al/St 560/50
120	32.2	1NJ100-114J	2080	150	536	200	755		1	M12	Al/St 560/50
120	32.2	1NJ100-123J	2080	150	566	180	912		1	M12	Al/St 560/50
120	32.2	1NJ200-125J	4160	136	816	200	1000	45	2	M12	Al/St 560/50
120	32.2	1NJ200-126J	4160	145	816	200	1035	62	2	M12	Al/St 560/50
120	38.6	1NJ100-122K	2700	150	511	300	1003		1	M12	Al/St 800/76
140	32.2	1NJ100-124J	2080	170	596	200	990		1	M12	Al/St 560/50
140	32.2	1NJ100-142J	2080	170	641	136	800		1	M12	Al/St 560/50
140	32.2	1NJ100-139J	2080	170	766	200	990		1	M12	Al/St 560/50
140	32.2	1NJ100-160J	2080	170	906	200	1086		1	M12	Al/St 560/50
140	32.2	1NJ100-141J	2080	170	934	136	1086		1	M12	Al/St 560/50
140	32.2	1NJ100-138J	2080	170	981	200	1200		1	M12	Al/St 560/50
140	32.2	1NJ200-140J	4160	160	1016	200	1235	62	2	M12	Al/St 560/50
150	32.2	1NJ100-124J	2080	170	596	200	990		1	M12	Al/St 560/50
150	32.2	1NJ100-142J	2080	170	641	136	800		1	M12	Al/St 560/50
150	32.2	1NJ100-139J	2080	170	766	200	990		1	M12	Al/St 560/50
150	32.2	1NJ100-160J	2080	170	906	200	1086		1	M12	Al/St 560/50
150	32.2	1NJ100-141J	2080	170	934	136	1086		1	M12	Al/St 560/50
150	32.2	1NJ100-138J	2080	170	981	200	1200		1	M12	Al/St 560/50
150	32.2	1NJ200-140J	4160	160	1016	200	1235	62	2	M12	Al/St 560/50
160	32.2	1NJ100-124J	2080	170	596	200	990		1	M12	Al/St 560/50
160	32.2	1NJ100-142J	2080	170	641	136	800		1	M12	Al/St 560/50
160	32.2	1NJ100-139J	2080	170	766	200	990		1	M12	Al/St 560/50
160	32.2	1NJ100-160J	2080	170	906	200	1086		1	M12	Al/St 560/50
160	32.2	1NJ100-141J	2080	170	934	136	1086		1	M12	Al/St 560/50
160	32.2	1NJ100-138J	2080	170	981	200	1200		1	M12	Al/St 560/50
160	32.2	1NJ200-140J	4160	160	1016	200	1235	62	2	M12	Al/St 560/50
200	32.2	1NJ100-200J	2080	185	716	200	930		1	M12	Al/St 560/50
200	32.2	1NJ100-207J	2080	185	731	200	930		1	M12	Al/St 560/50
200	32.2	1NJ100-205J	2080	185	866	200	1080		1	M12	Al/St 560/50
200	32.2	1NJ100-206J	2080	185	896	200	1115		1	M12	Al/St 560/50
200	32.2	1NJ200-200J	4160	185	766	200	980	62	2	M12	Al/St 560/50
200	32.2	1NJ200-190J	4160	185	966	200	1180	62	2	M12	Al/St 560/50
200	32.4	1NJ100-206L	2040	185	896	200	115		1	M12	Al/St 550/70

Figur 1

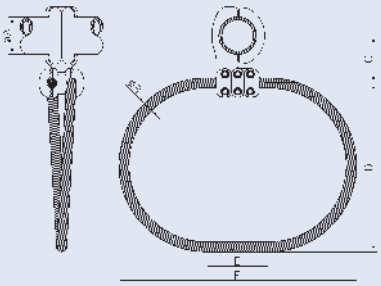

Figur 2

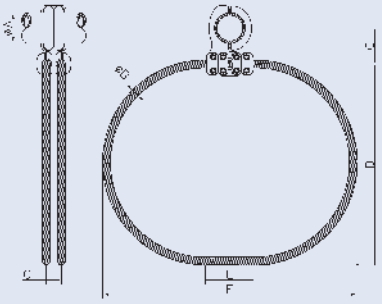

AL-Disconnector-Countercontact

Tube-Countercontact

Figur 1

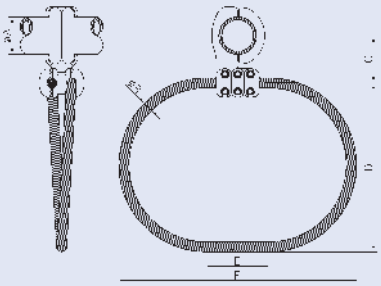

Figur 2

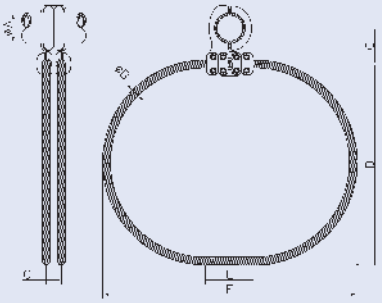

Dim. of Cond.		Code	Technical Dates of Connector								
ØA	ØB		Max. Curr.	C	D	E	F	G	Fig	Bolt Dim. ØA	Type of Rope ØB
250	32.2	1NJ100-152J	2080	212	643	100	850		1	M12	Al/St 560/50
250	32.2	1NJ100-250J	2080	212	656	200	858		1	M12	Al/St 560/50
250	32.2	1NJ100-260J	2080	212	691	200	912		1	M12	Al/St 560/50
250	32.2	1NJ100-262J	2080	212	701	200	910		1	M12	Al/St 560/50
250	32.2	1NJ100-156J	2080	212	934	100	1100		1	M12	Al/St 560/50
250	32.2	1NJ100-259J	2080	212	1426	200	1600		1	M12	Al/St 560/50
250	32.2	1NJ100-263J	2080	215	671	200	1100		1	M12	Al/St 560/50
250	32.2	1NJ200-250J	4160	210	766	200	982	62	2	M12	Al/St 560/50
250	32.4	1NJ100-256L	2040	212	701	200	880		1	M12	Al/St 550/70
250	32.4	1NJ100-254L	2040	212	716	200	933		1	M12	Al/St 550/70
250	32.4	1NJ100-251L	2040	212	771	200	988		1	M12	Al/St 550/70
250	32.4	1NJ100-257L	2040	212	776	200	993		1	M12	Al/St 550/70
250	32.4	1NJ100-258L	2040	212	861	200	1075		1	M12	Al/St 550/70
250	32.4	1NJ100-255L	2040	212	936	200	1153		1	M12	Al/St 550/70
250	32.4	1NJ100-264L	2040	215	851	200	1067		1	M12	Al/St 550/70
250	38.6	1NJ100-250K	2080	212	656	200	858		1	M12	Al/St 800/76
2,5“	32.2	1NJ100-080J	2080	115	716	200	932		1	M12	Al/St 560/50
3,5“	32.2	1NJ100-105J	2080	135	551	200	770		1	M12	Al/St 560/50
3,5“	32.2	1NJ100-100J	2080	135	611	180	953		1	M12	Al/St 560/50
3,5“	32.2	1NJ100-102J	2080	135	631	180	970		1	M12	Al/St 560/50
4“	32.2	1NJ100-114J	2080	150	536	200	755		1	M12	Al/St 560/50
4“	32.2	1NJ100-123J	2080	150	566	180	912		1	M12	Al/St 560/50
4“	32.2	1NJ200-125J	4160	136	816	200	1000	45	2	M12	Al/St 560/50
4“	32.2	1NJ200-126J	4160	145	816	200	1035	62	2	M12	Al/St 560/50
4“	38.6	1NJ100-122K	2700	150	511	300	1003		1	M12	Al/St 800/76
4,5“	32.2	1NJ100-114J	2080	150	536	200	755		1	M12	Al/St 560/50
4,5“	32.2	1NJ100-123J	2080	150	566	180	912		1	M12	Al/St 560/50
4,5“	32.2	1NJ200-125J	4160	136	816	200	1000	45	2	M12	Al/St 560/50
4,5“	32.2	1NJ200-126J	4160	145	816	200	1035	62	2	M12	Al/St 560/50
4,5“	38.6	1NJ100-122K	2700	150	511	300	1003		1	M12	Al/St 800/76
5“	32.2	1NJ100-124J	2080	170	596	200	990		1	M12	Al/St 560/50
5“	32.2	1NJ100-142J	2080	170	641	136	800		1	M12	Al/St 560/50
5“	32.2	1NJ100-139J	2080	170	766	200	990		1	M12	Al/St 560/50
5“	32.2	1NJ100-160J	2080	170	906	200	1086		1	M12	Al/St 560/50
5“	32.2	1NJ100-141J	2080	170	934	136	1086		1	M12	Al/St 560/50
5“	32.2	1NJ100-138J	2080	170	981	200	1200		1	M12	Al/St 560/50
5“	32.2	1NJ200-140J	4160	160	1016	200	1235	62	2	M12	Al/St 560/50

AL-Disconnector-Countercontact

Tube-Countercontact

Dim. of Cond.		Code	Technical Dates of Connector								
ØA	ØB		Max. Curr.	C	D	E	F	G	Fig	Bolt Dim. ØA	Type of Rope ØB
8″	32.2	1NJ100-222J	2080	200	626	200	1050		1	M12	Al/St 560/50
8″	32.2	1NJ100-224J	2080	200	676	200	1090		1	M12	Al/St 560/50
8″	32.2	1NJ200-220J	4160	185	766	200	880	45	2	M12	Al/St 560/50

Figur 1

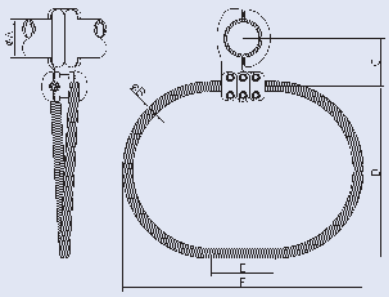

Figur 2

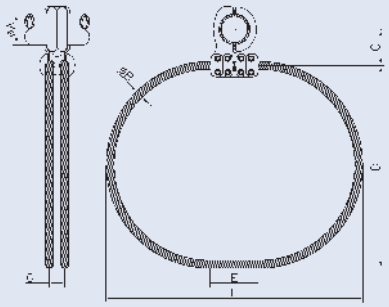

AL-Disconnector-Countercontact

Stud-Countercontact

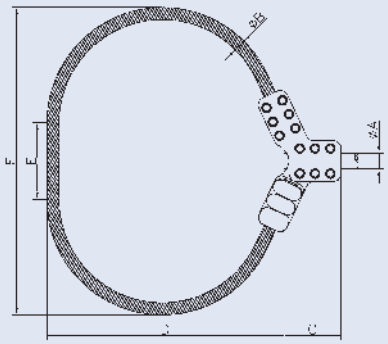

Dim. of Cond.			Code	Technical Dates of Connector						
ØA	ØB			Max. Curr.	C	D	E	F	Bolt Dim. ØA	Type of Robe ØB
	Dim.	Pcs.								
40	30.5	1	1NJ050-057X	2000	143	539		651	M10	Al/St 490/65
40	32.0	1	1NJ050-051H	2000	150	619	200	804	M10	Al/St 537/53
40	32.2	1	1NJ050-051J	2000	150	619	200	804	M10	Al/St 560/50
50	30.5	1	1NJ050-057X	2000	143	539		651	M10	Al/St 490/65
50	32.0	1	1NJ050-051H	2000	150	619	200	804	M10	Al/St 537/53
50	32.2	1	1NJ050-064J	2080	150	770	150	773	M12	Al/St 560/50
50	32.2	1	1NJ050-051J	2000	150	619	200	804	M10	Al/St 560/50
50	32.2	2	1NJ055-063J	1700	91	816	200	1120	M12	Al/St 560/50
60	32.2	1	1NJ050-064J	2080	150	770	150	773	M10	Al/St 560/50
60	32.2	2	1NJ055-063J	1700	91	816	200	1120	M12	Al/St 560/50
70	32.2	2	1NJ055-080J	3200	115	935	200	1032	M12	Al/St 560/50
80	32.2	2	1NJ055-080J	3200	115	935	200	1032	M12	Al/St 560/50

AL-Duplex-Spacer

Conductor

Dim. of Conductor ØA Min.	Dim. of Conductor ØA Max.	Code	Technical Dates of Connector B	Technical Dates of Connector C	Technical Dates of Connector Bolt Dimension
16.3	20.0	1QA110-005	200	52	M10
20.1	21.1	1QA102-019	170	46	M10
20.1	21.1	1QA102-022	200	46	M10
20.1	21.1	1QA102-032	250	46	M10
20.1	21.1	1QA102-023	300	46	M10
20.1	21.1	1QA102-024	400	46	M10
20.1	21.1	1QA102-026	500	46	M10
20.1	21.1	1QA102-028	600	46	M10
20.1	21.1	1QA102-029	900	46	M10
20.1	21.1	1QA102-030	1000	46	M10
21.2	23.4	1QA102-019	170	46	M10
21.2	23.4	1QA102-022	200	46	M10
21.2	23.4	1QA102-032	250	46	M10
21.2	23.4	1QA102-023	300	46	M10
21.2	23.4	1QA102-024	400	46	M10
21.2	23.4	1QA102-026	500	46	M10
21.2	23.4	1QA102-028	600	46	M10
21.2	23.4	1QA102-029	900	46	M10
21.2	23.4	1QA102-030	1000	46	M10
23.5	25.7	1QA102-019	170	46	M10
23.5	25.7	1QA102-022	200	46	M10
23.5	25.7	1QA102-032	250	46	M10
23.5	25.7	1QA102-023	300	46	M10
23.5	25.7	1QA102-024	400	46	M10
23.5	25.7	1QA102-026	500	46	M10
23.5	25.7	1QA102-028	600	46	M10
23.5	25.7	1QA102-029	900	46	M10
23.5	25.7	1QA102-030	1000	46	M10
25.8	28.1	1QA010-100	52	42	M10
25.8	28.1	1QA010-157	62	42	M10
25.8	28.1	1QA102-019	170	46	M10
25.8	28.1	1QA102-022	200	46	M10
25.8	28.1	1QA102-032	250	46	M10
25.8	28.1	1QA102-023	300	46	M10
25.8	28.1	1QA102-024	400	46	M10
25.8	28.1	1QA102-026	500	46	M10
25.8	28.1	1QA102-028	600	46	M10

B ≤ 100

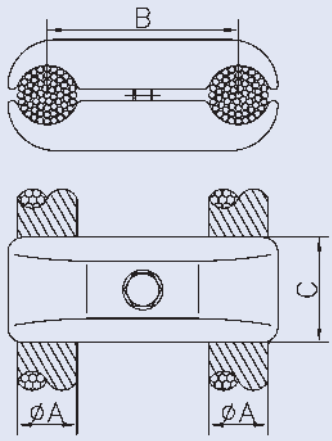

B ≥ 100

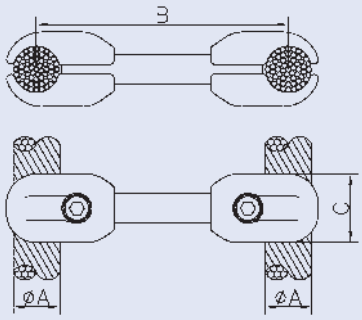

AL-Duplex-Spacer

Conductor

B ≤ 100

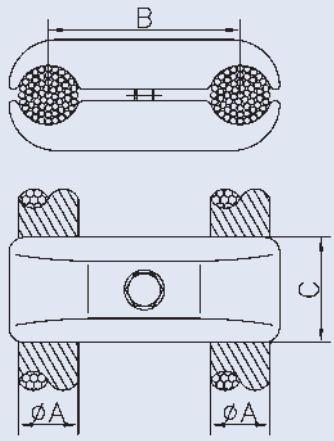

B ≥ 100

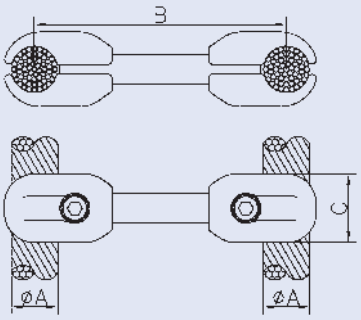

Dim. of Conductor ØA		Code	Technical Dates of Connector		
Min.	Max.		B	C	Bolt Dimension
25.8	28.1	1QA102-029	900	46	M10
25.8	28.1	1QA102-030	1000	46	M10
28.2	29.0	1QA010-130	80	55	M10
28.2	29.0	1QA102-019	170	46	M10
28.2	29.0	1QA102-022	200	46	M10
28.2	29.0	1QA102-032	250	46	M10
28.2	29.0	1QA102-023	300	46	M10
28.2	29.0	1QA102-024	400	46	M10
28.2	29.0	1QA102-026	500	46	M10
28.2	29.0	1QA102-028	600	46	M10
28.2	29.0	1QA102-029	900	46	M10
28.2	29.0	1QA102-030	1000	46	M10
29.1	29.9	1QA102-019	170	46	M10
29.1	29.9	1QA102-022	200	46	M10
29.1	29.9	1QA102-032	250	46	M10
29.1	29.9	1QA102-023	300	46	M10
29.1	29.9	1QA102-024	400	46	M10
29.1	29.9	1QA102-026	500	46	M10
29.1	29.9	1QA102-028	600	46	M10
29.1	29.9	1QA102-029	900	46	M10
29.1	29.9	1QA102-030	1000	46	M10
30.0	33.0	1QA010-140	45	42	M10
30.0	33.0	1QA010-145	52	42	M10
30.0	33.0	1QA010-150	60	65	M10
30.0	33.0	1QA010-155	62	42	M10
30.0	33.0	1QA010-165	80	55	M10
30.0	33.0	1QA010-160	90	55	M10
30.0	33.0	1QA010-175	100	55	M10
30.0	33.0	1QA102-038	150	46	M10
30.0	33.0	1QA102-040	200	46	M10
30.0	33.0	1QA102-035	250	46	M10
30.0	33.0	1QA102-049	270	46	M10
30.0	33.0	1QA102-054	280	46	M10
30.0	33.0	1QA102-047	300	46	M10
30.0	33.0	1QA102-050	330	46	M10
30.0	33.0	1QA102-052	360	46	M10
30.0	33.0	1QA102-043	400	46	M10

AL-Duplex-Spacer

Conductor

Dim. of Conductor ØA Min.	Dim. of Conductor ØA Max.	Code	Technical Dates of Connector B	Technical Dates of Connector C	Technical Dates of Connector Bolt Dimension
30.0	33.0	1QA102-041	450	46	M10
30.0	33.0	1QA102-044	457	46	M10
30.0	33.0	1QA102-045	500	46	M10
30.0	33.0	1QA102-053	600	46	M10
30.0	33.0	1QA102-051	800	46	M10
33.1	35.0	1QA010-170	90	65	M10
33.1	35.0	1QA010-034	100	55	M10
33.1	35.0	1QA102-038	150	46	M10
33.1	35.0	1QA102-040	200	46	M10
33.1	35.0	1QA102-035	250	46	M10
33.1	35.0	1QA102-049	270	46	M10
33.1	35.0	1QA102-054	280	46	M10
33.1	35.0	1QA102-047	300	46	M10
33.1	35.0	1QA102-050	330	46	M10
33.1	35.0	1QA102-052	360	46	M10
33.1	35.0	1QA102-043	400	46	M10
33.1	35.0	1QA102-041	450	46	M10
33.1	35.0	1QA102-044	457	46	M10
33.1	35.0	1QA102-045	500	46	M10
33.1	35.0	1QA102-053	600	46	M10
33.1	35.0	1QA102-051	800	46	M10
36.0	39.2	1QA010-185	62	42	M10
36.0	39.2	1QA010-190	80	55	M10
36.0	39.2	1QA010-195	90	55	M10
36.0	39.2	1QA010-200	100	58	M10
36.0	39.2	1QA102-038	150	46	M10
36.0	39.2	1QA102-040	200	46	M10
36.0	39.2	1QA102-035	250	46	M10
36.0	39.2	1QA102-049	270	46	M10
36.0	39.2	1QA102-054	280	46	M10
36.0	39.2	1QA102-047	300	46	M10
36.0	39.2	1QA102-050	330	46	M10
36.0	39.2	1QA102-052	360	46	M10
36.0	39.2	1QA102-043	400	46	M10
36.0	39.2	1QA102-041	450	46	M10
36.0	39.2	1QA102-044	457	46	M10
36.0	39.2	1QA102-045	500	46	M10

B ≤ 100

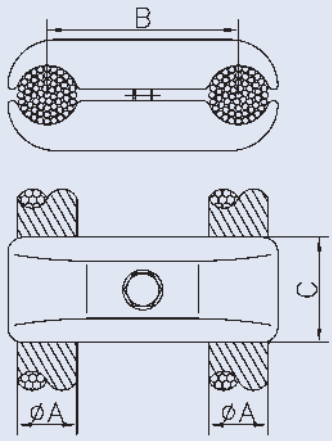

B ≥ 100

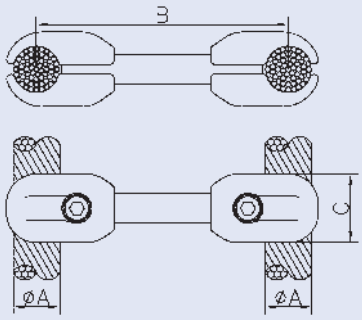

AL-Duplex-Spacer

Conductor

B ≤ 100

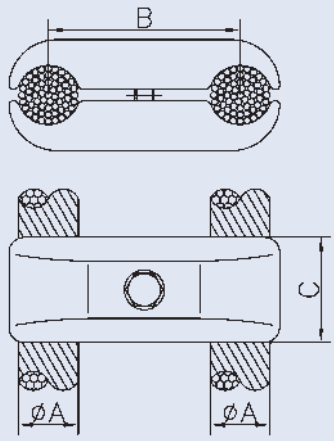

B ≥ 100

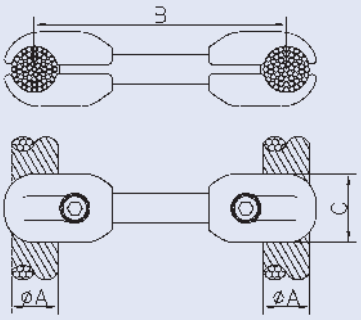

Dim. of Conductor ØA		Code	Technical Dates of Connector		
Min.	Max.		B	C	Bolt Dimension
36.0	39.2	1QA102-053	600	46	M10
36.0	39.2	1QA102-051	800	46	M10
39.3	39.9	1QA102-038	150	46	M10
39.3	39.9	1QA102-040	200	46	M10
39.3	39.9	1QA102-035	250	46	M10
39.3	39.9	1QA102-049	270	46	M10
39.3	39.9	1QA102-054	280	46	M10
39.3	39.9	1QA102-047	300	46	M10
39.3	39.9	1QA102-050	330	46	M10
39.3	39.9	1QA102-052	360	46	M10
39.3	39.9	1QA102-043	400	46	M10
39.3	39.9	1QA102-041	450	46	M10
39.3	39.9	1QA102-044	457	46	M10
39.3	39.9	1QA102-045	500	46	M10
39.3	39.9	1QA102-053	600	46	M10
39.3	39.9	1QA102-051	800	46	M10
40.0	44.0	1QA010-210	72	55	M10
40.0	44.0	1QA010-215	80	85	M10
40.0	44.0	1QA010-225	90	55	M10
40.0	44.0	1QA010-230	100	55	M10
40.0	44.0	1QA102-038	150	46	M10
40.0	44.0	1QA102-040	200	46	M10
40.0	44.0	1QA102-035	250	46	M10
40.0	44.0	1QA102-049	270	46	M10
40.0	44.0	1QA102-054	280	46	M10
40.0	44.0	1QA102-047	300	46	M10
40.0	44.0	1QA102-050	330	46	M10
40.0	44.0	1QA102-052	360	46	M10
40.0	44.0	1QA102-043	400	46	M10
40.0	44.0	1QA102-041	450	46	M10
40.0	44.0	1QA102-044	457	46	M10
40.0	44.0	1QA102-045	500	46	M10
40.0	44.0	1QA102-053	600	46	M10
40.0	44.0	1QA102-051	800	46	M10
44.1	45.9	1QA110-330	150	65	M10
44.1	45.9	1QA102-056	200	70	M12
44.1	45.9	1QA110-331	250	65	M10

AL-Duplex-Spacer

Conductor

Dim. of Conductor ØA		Code	Technical Dates of Connector		
Min.	Max.		B	C	Bolt Dimension
44.1	45.9	1QA110-340	300	65	M10
44.1	45.9	1QA102-059	400	70	M12
44.1	45.9	1QA102-061	450	70	M12
44.1	45.9	1QA110-332	550	65	M10
46.0	52.0	1QA010-046	90	60	M12
46.0	52.0	1QA010-250	100	60	M12
46.0	52.0	1QA110-330	150	65	M10
46.0	52.0	1QA102-056	200	70	M12
46.0	52.0	1QA110-331	250	65	M10
46.0	52.0	1QA110-340	300	65	M10
46.0	52.0	1QA102-059	400	70	M12
46.0	52.0	1QA102-061	450	70	M12
46.0	52.0	1QA110-332	550	65	M10
52.1	59.0	1QA110-355	150	65	M12
52.1	59.0	1QA110-360	200	65	M12
52.1	59.0	1QA110-365	305	65	M12

B ≤ 100

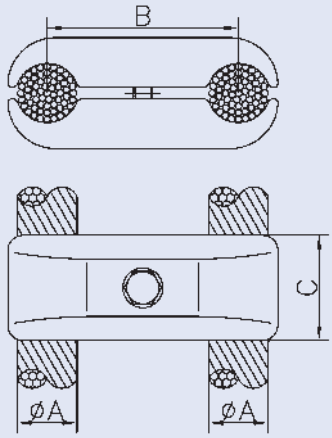

B ≥ 100

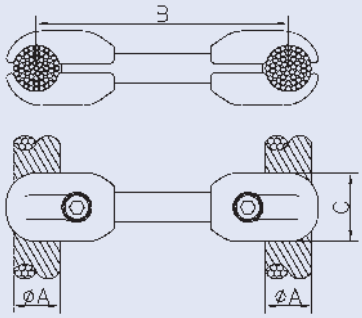

AL-Triplex-Spacer

Conductor

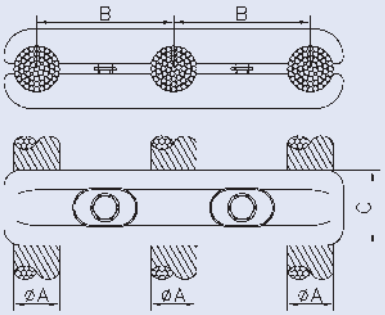

Dim. of Conductor		Code	Technical Dates of Connector		
ØA			B	C	Bolt Dimension
Min.	Max.				
26.0	29.4	1QB010-034	100	55	M10
29.5	33.0	1QB010-035	100	55	M10
29.5	33.0	1QB200-039	200	40	M10
29.5	33.0	1QB200-225	225	56	M10
33.1	35.9	1QB200-035	100	56	M10
33.1	35.9	1QB200-039	200	40	M10
33.1	35.9	1QB200-225	225	56	M10
36.0	39.2	1QB010-100	100	55	M10
36.0	39.2	1QB200-039	200	40	M10
36.0	39.2	1QB200-225	225	56	M10
39.3	42.0	1QB200-035	100	56	M10
39.3	42.0	1QB200-039	200	40	M10
39.3	42.0	1QB200-225	225	56	M10
42.1	44.0	1QB200-041	200	70	M10

AL-Triplex-Spacer

Conductor

Dim. of Conductor		Code	Technical Dates of Connector		
ØA			B	C	Bolt Dimension
Min.	Max.				
21.0	24.0	1QB602-030	200	46	M10
21.0	24.0	1QB602-031	400	46	M10
24.1	29.9	1QB602-030	200	46	M10
24.1	29.9	1QB602-031	400	46	M10
30.0	42.0	1QB602-035	150	46	M10
30.0	42.0	1QB602-040	200	46	M10
30.0	42.0	1QB602-340	300	46	M10
30.0	42.0	1QB602-330	330	46	M10
30.0	42.0	1QB602-350	350	46	M10
30.0	42.0	1QB602-440	400	46	M10
30.0	42.0	1QB602-456	457	46	M10
42.1	44.0	1QB602-035	150	46	M10
42.1	44.0	1QB602-040	200	46	M10
42.1	44.0	1QB602-340	300	46	M10
42.1	44.0	1QB602-330	330	46	M10
42.1	44.0	1QB602-350	350	46	M10
42.1	44.0	1QB602-440	400	46	M10
42.1	44.0	1QB602-456	457	46	M10
42.1	44.0	1QB602-650	600	70	M12
44.1	51.0	1QB602-650	600	70	M12

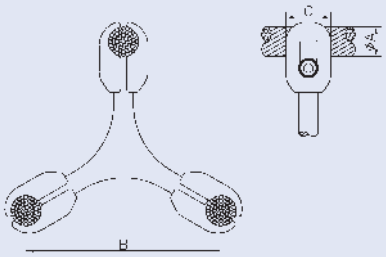

AL-Quadruple-Spacer

Conductor

B ≤ 100

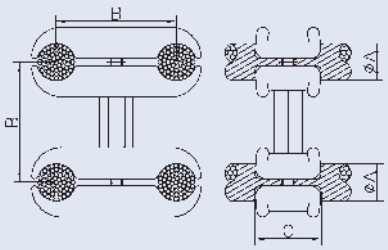

B ≥ 100

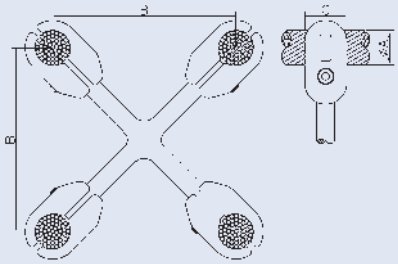

Dim. of Conductor ØA		Code	Technical Dates of Connector		
Min.	Max.		B	C	Bolt Dimension
20.1	21.1	1QC602-041	150	46	M10
20.1	21.1	1QC602-220	200	46	M10
20.1	21.1	1QC602-251	250	46	M10
20.1	21.1	1QC602-440	400	46	M10
21.2	23.4	1QC510-020	50	40	M10
21.2	23.4	1QC602-041	150	46	M10
21.2	23.4	1QC602-220	200	46	M10
21.2	23.4	1QC602-251	250	46	M10
21.2	23.4	1QC602-440	400	46	M10
23.5	25.7	1QC602-041	150	46	M10
23.5	25.7	1QC602-220	200	46	M10
23.5	25.7	1QC602-251	250	46	M10
23.5	25.7	1QC602-440	400	46	M10
25.8	28.1	1QC510-025	50	42	M10
25.8	28.1	1QC602-041	150	46	M10
25.8	28.1	1QC602-220	200	46	M10
25.8	28.1	1QC602-251	250	46	M10
25.8	28.1	1QC602-440	400	46	M10
28.2	29.9	1QC510-040	80	55	M10
28.2	29.9	1QC602-041	150	46	M10
28.2	29.9	1QC602-220	200	46	M10
28.2	29.9	1QC602-251	250	46	M10
28.2	29.9	1QC602-440	400	46	M10
30.0	33.0	1QC510-040	80	55	M10
30.0	33.0	1QC510-045	90	55	M10
30.0	33.0	1QC510-046	100	55	M10
30.0	33.0	1QC602-040	200	46	M10
30.0	33.0	1QC602-400	400	46	M10
30.0	33.0	1QC602-457	457	46	M10
33.1	35.0	1QC510-090	90	65	M10
33.1	35.0	1QC510-034	100	55	M10
33.1	35.0	1QC602-040	200	46	M10
33.1	35.0	1QC602-400	400	46	M10
33.1	35.0	1QC602-457	457	46	M10
35.1	44.0	1QC602-040	200	46	M10
35.1	44.0	1QC602-400	400	46	M10
35.1	44.0	1QC602-457	457	46	M10

AL-Quadruple-Spacer

Conductor

Dim. of Conductor		Code	Technical Dates of Connector		
ØA			B	C	Bolt Dimension
Min.	Max.				
46.0	50.0	1QC510-100	100	60	M12

B ≤ 100

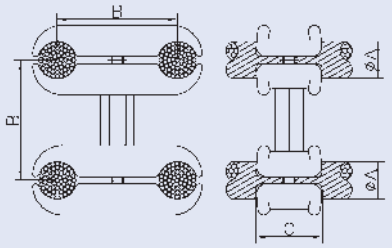

B ≥ 100

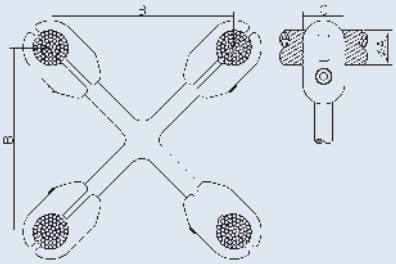

AL-Tube-Endcap

Tube

Dim. of Conductor ØA	Code	Technical Dates of Connector		
		B	C	Bolt Dimension
63	1RB100-020	89	60	M8
80	1RB100-030	106	66	M8
100	1RB100-050	130	70	M8
100	1RB100-080	200	142	M8
120	1RB100-070	150	90	M8
120	1RB100-080	200	142	M8
140	1RB100-090	169	100	M8
140	1RB100-080	200	142	M8
150	1RB100-100	178	104	M8
160	1RB100-110	190	110	M8
200	1RB100-120	230	120	M10
250	1RB100-140	283	160	M10
2“	1RB100-020	89	60	M8
3“	1RB100-040	116	71	M8
3,5“	1RB100-050	130	70	M8
3,5“	1RB100-080	200	142	M8
4“	1RB100-062	150	90	M8
4“	1RB100-080	200	142	M8
4,5“	1RB100-080	200	142	M8
5“	1RB100-090	169	100	M8
5“	1RB100-080	200	142	M8
6“	1RB100-170	200	100	M10
8“	1RB100-130	253	145	M10

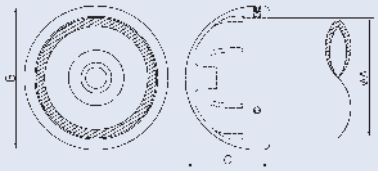

AL-Tube-Endcap

Tube-Conductor

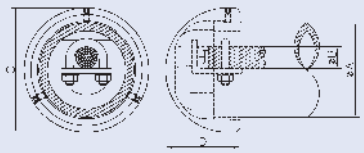

Dimension of Conductor			Code	Technical Dates of Connector			
ØA	ØB			C	D	Bolt Dim.	
	Min.	Max.				ØA	ØB
80	32.0	40.0	1RB800-080	106	67	M8	M12
100	5.0	26.0	1RB910-100	130	70	M8	M12
250	20.0	33.0	1RB910-250	283	160	M10	M10
3,5“	5.0	26.0	1RB910-100	130	70	M8	M12
4“	20.0	27.5	1RB910-114	150	90	M8	M10
8“	27.5	33.0	1RB910-220	253	145	M10	M10

AL-Tube-Endcap

Tube

Dim. of Conductor ØA	Code	Technical Dates of Connector		
		B	C	Bolt Dimension
120	1RC100-121	300	316	M10
140	1RC100-141	300	305	M10
160	1RC100-161	300	313	M10
200	1RC100-200	300	283	M10
4“	1RC100-114	300	316	M10
4,5“	1RC100-127	300	316	M10
5“	1RC100-141	300	305	M10
6“	1RC100-168	300	275	M10

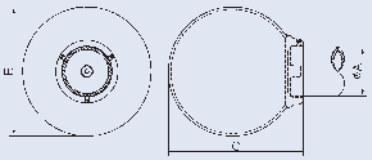

Cableholder for Dampingwire

Conductor

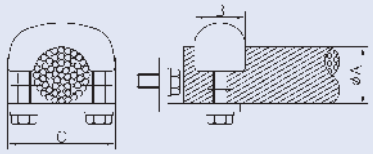

Dim. of Conductor		Code	Technical Dates of Connector		
ØA			B	C	Bolt Dimension
Min.	Max.				
12.0	16.0	1RR100-050	30	50	M10
22.0	33.0	1RR100-030	38	70	M10
33.1	42.0	1RR100-040	38	80	M10
52.1	63.0	1RR100-058	44	100	M12

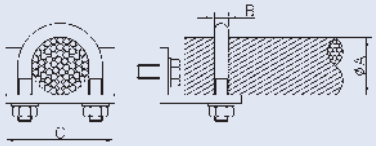

21.0	29.0	5RR050-010	10	60	M10
29.1	34.0	5RR050-030	10	70	M10
34.1	39.0	5RR050-040	10	75	M10

AL-Corona-Protection for Flat Terminal

Flat Terminal

Code	Technical Data of Contra-Protection								Remark
	A	B	C	D	Dim. of Connector				
					Pcs.	E	F	Bolt Dim.	
1TF100-050	85	137	15.5	8	2		45	M12	
1TF100-103	104	97	23	5	4	40	40	M12	
1TF100-080	115	115	25	5	4	50	50	M12	asymmetric right
1TF100-081	115	115	25	5	4	50	50	M12	asymmetric left
1TF100-102	165	120	25	5	6	44.5	44.5	M12	
1TF100-100	131	116	25	5	4	50	50	M12	
1TF100-152	131	165	25	5	6	50	50	M12	
1TF100-125	140	140	28	5	9	50	50	M12	asymmetric left
1TF100-150	170	156	38	5	9	50	50	M12	
1TF100-151	181	116	25	5	6	50	50	M12	

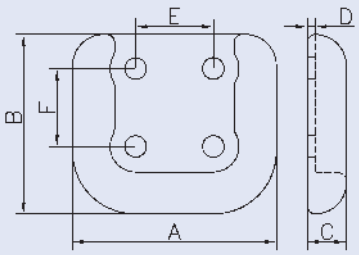

AL/ST-Corona-Protection-Ring

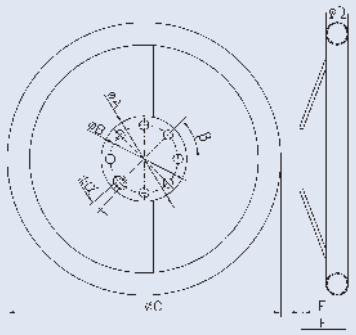

Dim. of Base plate		Code	Technical Data of Corona-Protection								
			ØC	ØD	E	F	Drillingplan				Material
ØA	ØB						C	D	α	β	
160	127	1TZ010-500	500	60	75	15	4	18		45°	AL
160	127	1TZ010-129	730	60		10	8	18			AL
160	127	5TZ010-128	730	60	100	6	8	18			ST
160	127	1TZ010-128	730	60	100	10	8	18			AL
190	127	1TZ010-190	730	60		10	8	18			AL
160	127	5TZ010-127	730	60	100	6	8	18			ST
260	225	5TZ010-120	550	60	50	10	4	18			ST
260	225	5TZ010-225	730	60	75	12	8	18	5°		ST
260	225	1TZ010-226	730	60	85	10	4	18		45°	AL
260	225	1TZ010-225	730	60	100	10	8	18			AL
290	254	1TZ010-254	730	60	100	10	8	18			AL
300	127	1TZ010-082	820	80	150	8	4	18			AL

AL-Ice-Holding-Clamp

Tube

Dimension of Conductor ØA	Code	Technical Dates of Connector		
		B	C	Bolt Dimension ØA
120	1TS100-120	174	118	M10
140	1TS100-160	214	118	M10
150	1TS100-160	214	118	M10
160	1TS100-160	214	118	M10
200	1TS100-200	284	118	M10
250	1TS100-250	304	118	M10
4“	1TS100-120	174	118	M10
4,5“	1TS100-120	174	118	M10
5“	1TS100-160	214	118	M10

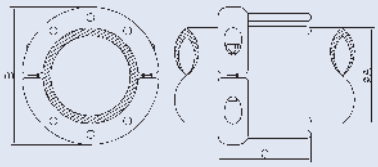

CU-Earthing-Bolt

tinned

Figur 1

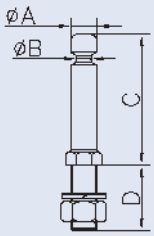

Figur 2

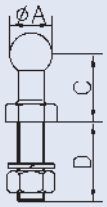

Code	Technical Dates of Connector					
	ØA	ØB	C	D	Bolt Dim.	Figur
3TE190-120	15.9	9	80	40	M12	1
3TE190-121	15.9	9	80	40	M16	1
3TE190-123	20		32	25	M10	2
3TE190-122	20		32	28	M12	2
3TE190-124	20		32	36	M12	2
3TE190-126	25		40	36	M12	2
3TE190-125	25		40	27	M16	2
3TE190-127	25		40	47	M16	2